4-Horse Panel Walker

Installation Instructions

Model 442

Includes New Touch Screen and Push Button Control Boxes, Optional Pedestal, Drag, and Spray Kit Assembly Instructions

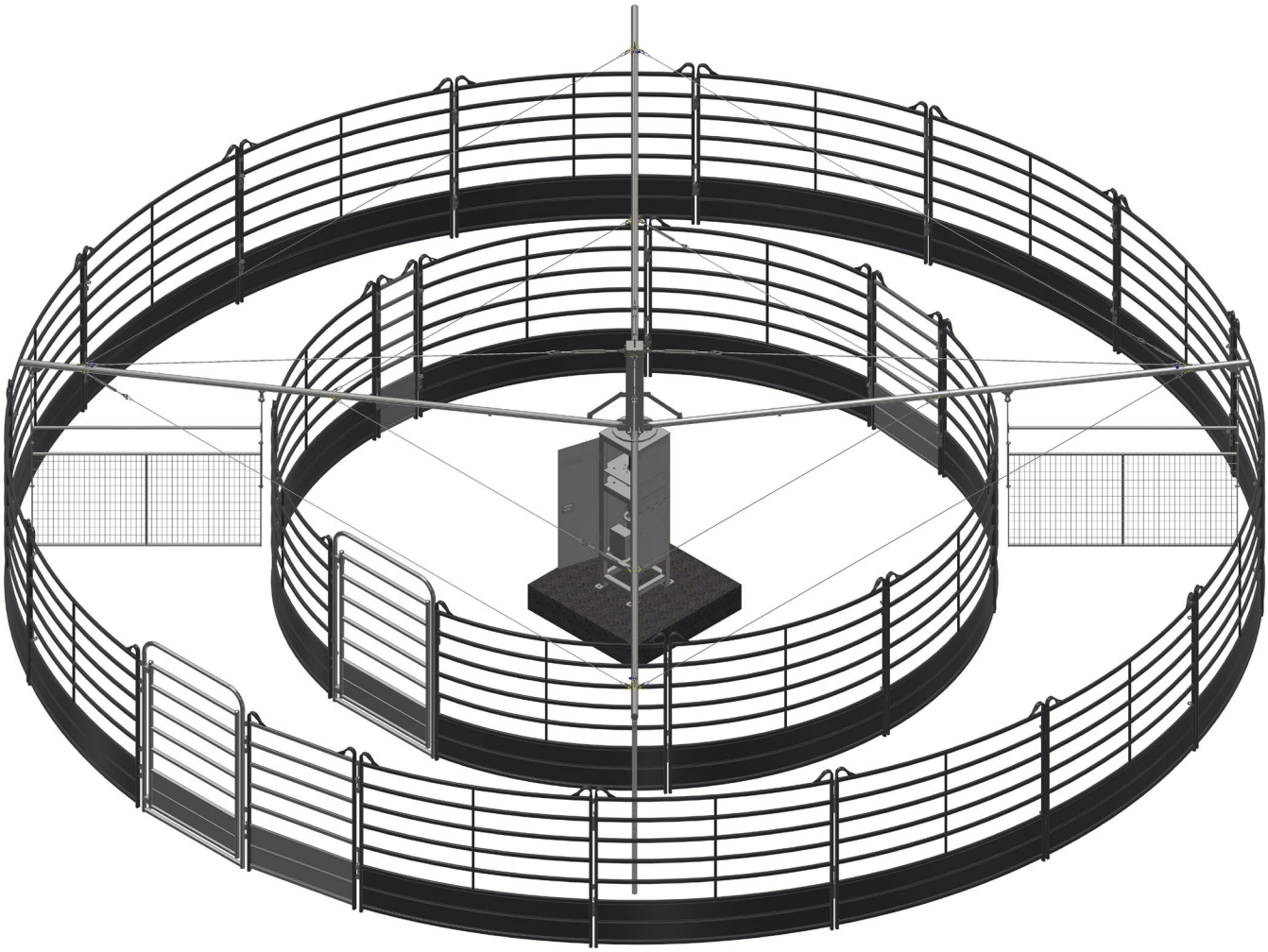

Priefert®

www.priefert.com 800-527-8616

Congratulations on choosing "Priefert's 4-Horse Panel Walker."

Priefert Horse Walkers are attractive, durable, and offer more options than ever before. Top equine professionals from around the world choose our horse walkers for their reliability and the company that stands behind it.

Priefert products are used and tested in our manufacturing facility and on the Priefert Ranch. The Priefert family personally tests and uses every product they build before sharing it with their friends around the world.

Priefert EQUINE

"Priefert Equine...Unbridled Commitment"

REMEMBER SAFETY FIRST!

Be Alert - Eliminate unsafe habits and risky behavior, recognize hazards as they exist and read and follow these Installation Instructions to successfully assembly the Priefert 4-Horse Panel Walker.

READ AND UNDERSTAND THESE INSTRUCTIONS BEFORE BEGINNING INSTALLATION.
Follow all safety warnings and recommendations.

FCC Compliance Statement:

This device complies with part 15 of the FCC Rules. Operation is subject to the following two conditions:[1]

(1) This device may not cause harmful interference, and

(2) this device must accept any interference received, including interference that may cause undesired operation.

NOTE: This equipment has been tested and found to comply with the limits for a Class B digital device, pursuant to part 15 of the FCC Rules. These limits are designed to provide reasonable protection against harmful interference in a residential installation. This equipment generates, uses and can radiate radio frequency energy and, if not installed and used in accordance with the instructions, may cause harmful interference to radio communications. However, there is no guarantee that interference will not occur in a particular installation. If this equipment does cause harmful interference to radio or television reception, which can be determined by turning the equipment off and on, the user is encouraged to try to correct the interference by one or more of the following measures:

—Reorient or relocate the receiving antenna.

—Increase the separation between the equipment and receiver.

—Connect the equipment into an outlet on a circuit different from that to which the receiver is connected.

—Consult the dealer or an experienced radio/TV technician for help.

Using this manual:

These Installation Instructions are a compilation of engineering data and field experience, and are designed to help you with proper installation, safety, operation and adjustments. Read these instructions completely prior to beginning assembly, and follow the recommendations to help ensure safe and efficient operation.

The information contained herein was current at the time of printing. Your model may vary in design and configuration from those shown in this manual. There is a possibility that some illustrations in our manuals were of prototype models. Design of production models may vary in detail from those shown in our manuals.

Priefert Manufacturing maintains an ongoing program of continuous product improvement. Therefore, Priefert reserves the right to make improvements or modifications in design, or specification changes without incurring any obligation to replace said items on units previously sold.

Your 4-Horse Panel Walker comes with an instructional DVD and is also available online in PDF format. Both have been designed to assist you in achieving optimal results with your Horse Walker.

Terminology

"NOTE:" provides the operator a brief summary of information that will assist in operating the implement.

"IMPORTANT:" denotes that the following content has significance in the operation or maintenance of the implement.

Owner Assistance

If customer service or repair parts are required, contact Priefert Manufacturing to reach our trained personnel who will assist you with repair parts and equipment needed to service your Panel Walker. The parts on your Panel Walker have been specifically designed and should only be replaced with genuine Priefert parts. Therefore, should your Priefert Panel Walker require replacement parts, contact our Support Center.

Customer Service

Priefert Manufacturing wants you to be satisfied with your new 4-Horse Panel Walker. If for any reason you are not satisfied with the equipment, the following actions are suggested:

Contact your Priefert Ranch Equipment dealer and discuss any problems that you may be experiencing. Allow them the opportunity to assist in correcting any problems that you may be experiencing.

For further assistance contact:

Priefert Manufacturing

Attention: Customer Service

2630 South Jefferson

P.O. Box 1540

Mount Pleasant, Texas 75456-1540

1-800-527-8616

Web-site address:

www.priefert.com

sales.priefert.com

Safety Alert Symbols

The **SAFETY ALERT SYMBOL** indicates there is a potential hazard to personal safety involved and extra safety precaution must be taken. When you see this symbol, be alert and carefully read the message that follows it. In addition to design and configuration of equipment, hazard control and accident prevention are dependent upon the awareness, concern, prudence and proper training of personnel involved in the operation, transport, maintenance and storage of equipment.

Owner/operator can prevent and may be responsible for accidents or injuries occurring to other people, themselves, and/or property and equipment.

Thoroughly read and understand the installation, operation, references and other material supplied with the Panel Walker. If the installer or operator cannot read English, it is the owner's responsibility to explain this material to them.

We strongly recommend that children are <u>not allowed</u> to operate or play on this equipment. Do not allow untrained people to operate or service equipment.

Horse Walker and Equine Safety

Due to the inherent dangers associated with equestrian activities, many states have adopted statutes pertaining to the liabilities of horse owners, handlers, and individuals involved in equestrian activities. Some states also require that you post signs at your facility with the specific "Warning Law" on them, for personal and/or professional equine activities. Posting these warning signs may help protect you and/or your organization in the event an accident or injury does occur. Please check the legal statute information in your state.

Horses can be easily spooked and this is when injuries may occur. One in three horse-related injuries happen when the rider/handler is dismounted. These injuries typically involve the handler being kicked or stepped on by the horse. Making sure all equine handlers are aware of the dangers posed by frightened horses and what actions can scare them can help prevent injuries. Some examples of things that can spook a horse include, sudden or unexpected movements; loud or sudden noises such as mobile phones or horns; other animals (i.e. unleashed and/or barking dogs) and biting insects.

Priefert advises that horses not be saddled or tacked when in the Walker, and recommends halters be removed to prevent possible entanglement with moving parts.

Additional information is provided in the Appendix at the end of this manual.

Installation / Operation Safety

- Read and understand the installation instructions completely before beginning installation. Work in a clean, dry, level area.
- Make sure any individuals assisting with the installation of this equipment understand the instructions as well. Priefert recommends the use of good quality tools of the type noted in this manual.
- Priefert also recommends wearing personal protective clothing while assembling this Panel Walker including gloves and safety glasses, as well as, arm, leg, head and foot protection.
- Allow only trained, qualified individuals to operate forklifts, tractors, loaders or other vehicles used during installations; and that those individuals are familiar with the operation of the specific vehicle used during installations.
- Operate equipment only during fair weather conditions.
- Disconnect power before performing any service or repairs to the equipment. Remove all tools used during installation from equipment before operation.
- Use care around and while handling support cables. Entanglement in support cables can cause death or serious injury.

Safe Operation Guidelines

- Use caution introducing horses to the walker until the horse becomes familiar with its operation.
- Do not let children play in or on horse walker or its components.
- Do not allow children to operate walker or its components.
- Do not sit, stand or climb on panels during operation
- Do not stick arms or legs through the panels while the walker is in motion.
- Do not touch hanging panels while power is on; panels are electrified.
- Make sure all guests or observers are clear of panels, gates and moving components prior to walker operation.
- Be sure both inner and outer gates are closed before operating walker. Never operate walker with gates open.
- Be sure the walker is completely stopped and power is off before opening gates or entering the walker.
- Be cautious to prevent being confined between the panels whenever horses are in the walker. Be cautious to prevent being caught between the horse and panels.
- Be sure that horses introduced to the walker are only handled by those familiar with equine behavior.
- Do not attempt to ride horses while in walker.
- Wearing proper clothing can help prevent injuries.
- Always take into consideration the age, physical condition and specific characteristics of horses within the Walker to prevent exceeding their limitations.

BE AWARE OF SIGNAL WORDS: A signal word designates a degree of level of hazard seriousness.

NOTE: Provides helpful information to the operator.

IMPORTANT: Indicates failure to observe may cause damage to equipment.

WARNING: Indicates a potentially hazardous situation which, if not avoided, could result in death or serious injury, and includes hazards that are exposed when guards are removed. It may also be used to alert against unsafe practices.

CAUTION: Indicates an imminently hazardous situation, which, if not avoided, may result in minor or moderate injury. It may also be used to alert against unsafe practices.

DANGER: Indicates an imminently hazardous situation, which, if not avoided, will result in death or serious injury. This signal word is limited to the most extreme situations, typically for machine components that, for functional purposes cannot be guarded.

Parts List

Inner Arm (4ea)
HWINNERARM

Outer Arm (4ea)
HW4OUTERARM

Base Assembly (1ea)
HWBASE46-ASM

Tree (1ea)
HW4TREE-ASM
w/Support Straps

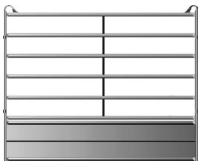

Inner Panel (8ea)
HW4PCPSBI-8

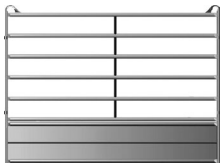

Outer Panel (15ea)
HW4PCPSBO

2' Panel (1ea)
HWPSP02SB

4' Panel (1ea)
HWPSP04SB

Support Strap (4ea)
HWPARMSTRAP
(attached to Tree)

Anchor Stake Clip (28ea)
HWRPSC

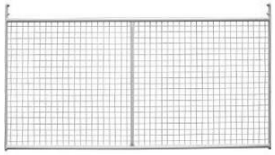

Hanging Panel (4ea)
HWP

3'-6" Panel (1ea)
HWPSP03.5SB

5' Bow Gate (2ea)
HWRPBG

Stabilizer Bar (4ea)
HWPS

Panel Strap - Short (4ea)
HWPARMS

½" Turnbuckle (4ea)
FMTB0812

Panel Strap - Long (4ea)
HWPARML

⅝" Turnbuckle (4ea)
FMTB1012

Inner Cables
⅝" x 162¼" (2ea)
CABLE0562.5-P

Inner Turnbuckle Cable
⅝" X 138¾" (2ea)
CABLE05138.75-P

Anchor Stake (28ea)
RBSTAKE

⅜" Quick Links (16ea)
FM06QL

Outer Cables
⅝" X 302" (2ea)
CABLE05302-P

Outer Turnbuckle Cables
⅝" X 280½" (2ea)
CABLE05280.5-P

Top Cable
½" X 184½" (4ea)
CABLE08184.5-P

½" Shackle (4ea)
C08AS

Warning (1ea)
DOMNI

Warning (1ea)
D325

Danger (2ea)
D315

Caution (4ea)
D250

Notice (1ea)
D125

Danger (2ea)
D331

Warning (4ea)
D121

Tools & Equipment Required

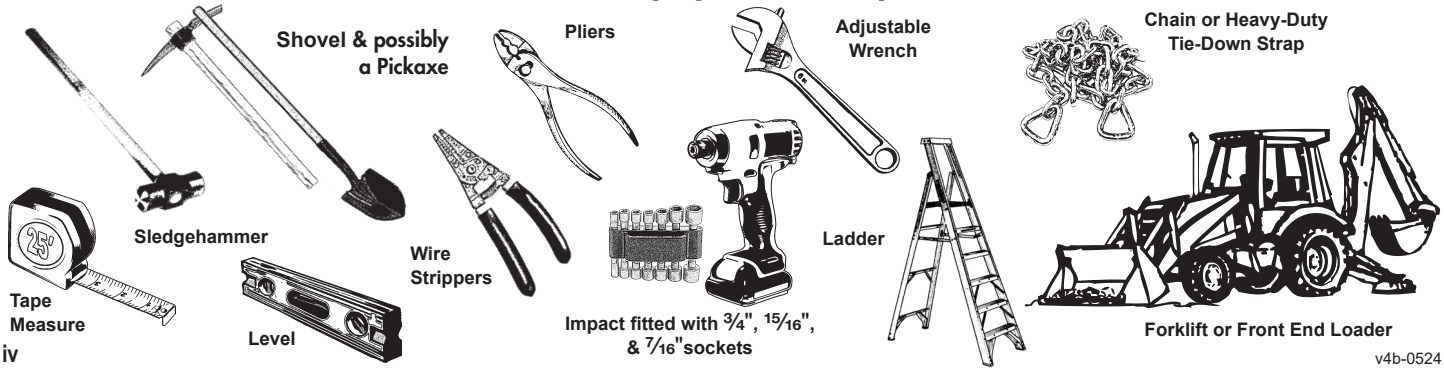

Table Of Contents

Congratulations . . . . . **ii**
Using this Manual . . . . . **ii**
Customer Service Information ii
Safety . . . . . **iii**
Safety Alert Symbols iii
Signal Words iii
Parts List . . . . . **iv**
Tools & Equipment Required . . . . . **iv**
Concrete Pad Preparation **2**
Pad Dimensions 2
Structural Anchor Bolt Jig 2
Horse Walker Assembly **3**
Important Breather Plug Information **3**
Setting Walker Base Assy 4
Attaching Tree 4
Installing Arms 4
Attaching Top Cables 5
Attaching Inner & Outer Cables 6
Dimensions For Round Pens **7**
Clearances 7
Critical Dimensions 7-8
Hanging Panel Assembly **8-9**
Hanging Panel Mechanical Connections 8
Hanging Panel Electrical Connections 12
Critical Dimensions **9**
Round Pen Assembly **10-11**
Inner Ring Assembly 10
Outer Ring Assembly 11
Horse Walker Electrical Instructions **12-13**
Control Panel Identification 12
Control Panel Contents Description 12
Basic Wiring Diagram 13
Programming The Remote **14-15**
Control Panel Description 14
Programming Directions 15
Horse Walker Operation Instructions **16**
Touch Screen Panel Functions 16
Screen Display Examples 16-19
Push Button Control Panel Functions 20
Optional Control Box Pedestal Installation **21**
Pad Dimensions 21
Structural Anchor Bolt Jig 21
Optional Spray Kit Installation **22-23**
Spray Kit Parts List 23
Optional Drag Installation **24**
Drag Parts List 24
Appendix **25**

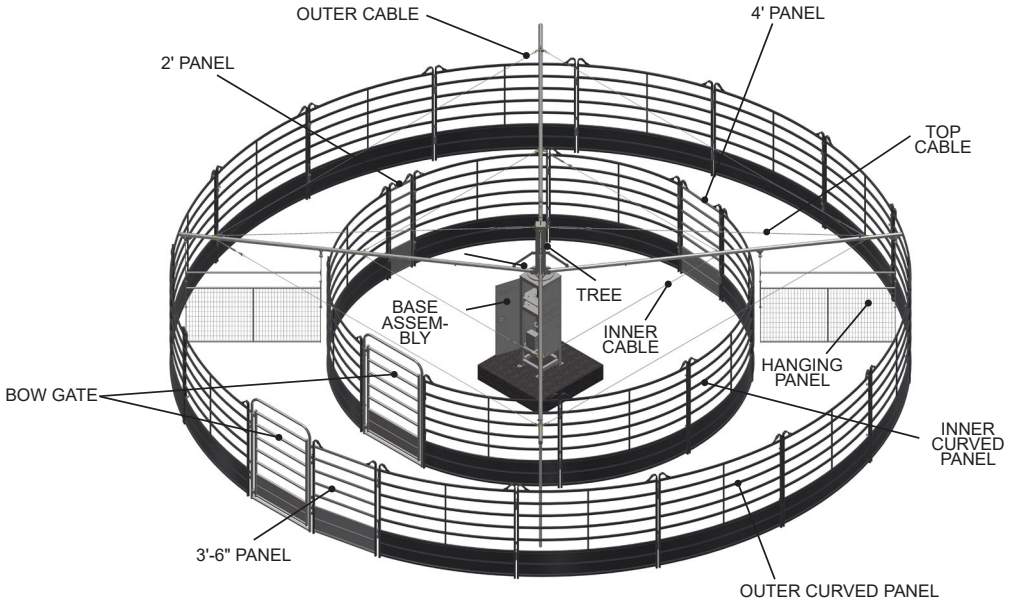

Concrete Pad Preparation

IMPORTANT: Be sure to select an area that is large enough to accommodate the Horse Walker Outer Ring with sufficient clearance all around. Area should also be level, and if possible, slightly higher than surrounding terrain to allow drainage, but not excessive runoff. Avoid low-level areas which could lead to ponding, puddles and depositing of sediments. Level grading surface location prior to installation will produce the best results.

SPECIAL NOTE: ***If Control Box Pedestal is to be included, preparation should be made at this time so that conduit can run from Walker Base to Control Box Pad. See Page 21 for requirements.***

Control Box Pad should be installed at the same time as the Walker Base.

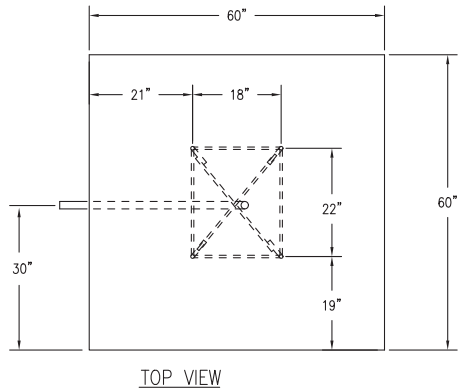

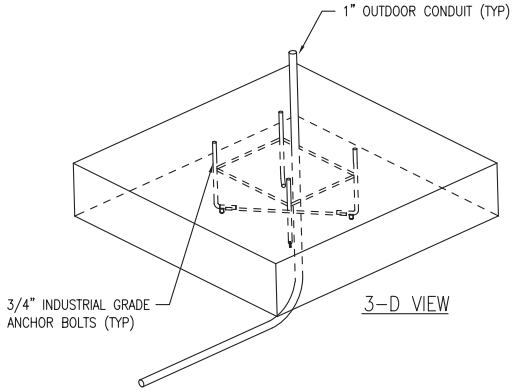

Panel Walker and Lead Walker Require 240 VAC 30 Amps.

See Page 14 for Electrical Connections

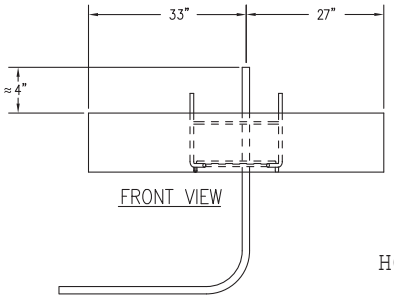

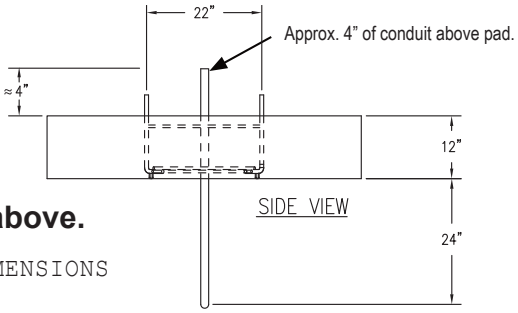

NOTE:
Top of pad should be flush with ground or 1" above.

HORSE WALKER CONCRETE PAD DIMENSIONS
Not to Scale

ADDITIONAL NOTE: **If Optional Spray Kit is to be installed, waterline should be buried during this step of the installation process. Priefert recommends Sch40 PVC buried below the freeze level for your location. Determine the water supply location for the Spray Kit, and stub up and cap for that installation. (See pg. 24)**

1. Concrete pad should follow the above specifications.

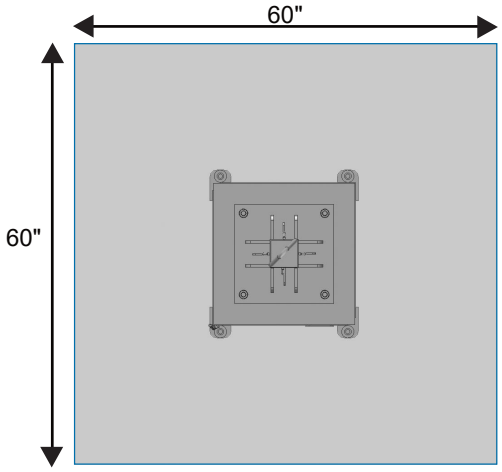

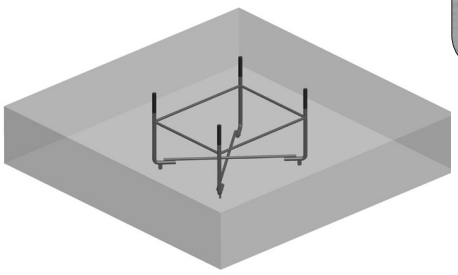

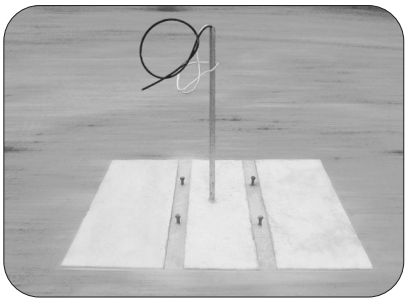

We Strongly Recommend using the included Structural Anchor Bolt Jig

2. Walker Base Assembly will sit on an anchor bolt pattern of 18" x 22". The 18" side will be the front side with the door. Overall diameter of walker to the end of the arms is approx. 72' - (36' Radius). When placing the walker, keep the end of the arms 10' to 12' feet from any obstruction.

IMPORTANT: IF factory provided Anchor Bolt Jig is NOT used in installation, use INDUSTRIAL GRADE 3/4" anchor bolts.

Horse Walker Assembly Breather Installation

VERY IMPORTANT!

After locating and leveling Walker Base, **Plug must be taken out & breather installed before power is turned on.**

The breather is shipped *inside the Control Panel* with the Remote Control and Antenna.

Open Control Panel Box, remove breather and install *BEFORE* turning on Horse Walker power.

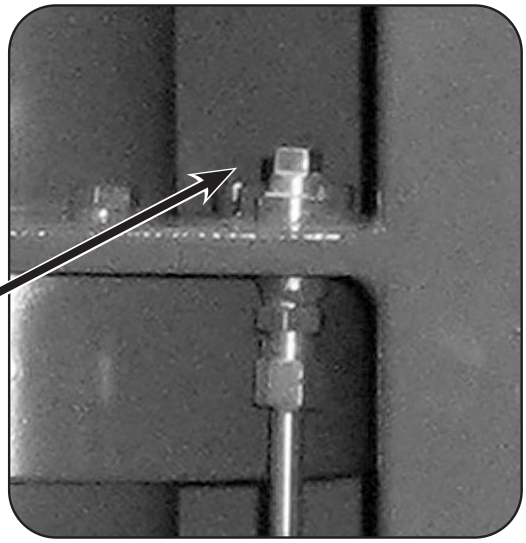

After locating and leveling Walker Base

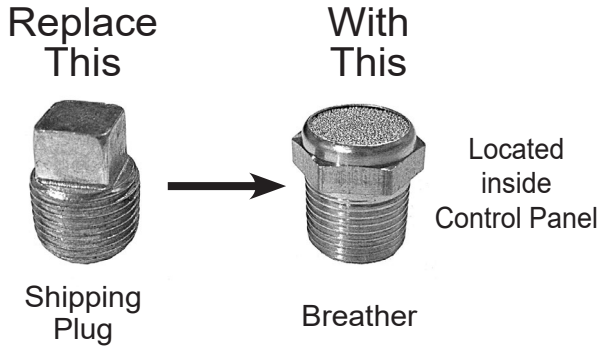

The gearbox is pre-filled with Lucas 75w140 Synthetic oil.

Priefert recommends changing the oil after the first 250 hours of operation. Oil should be changed every 500 hours or each year of operation thereafter, whichever comes first.

Always replace with Lucas 75w140 Synthetic oil or equivalent.

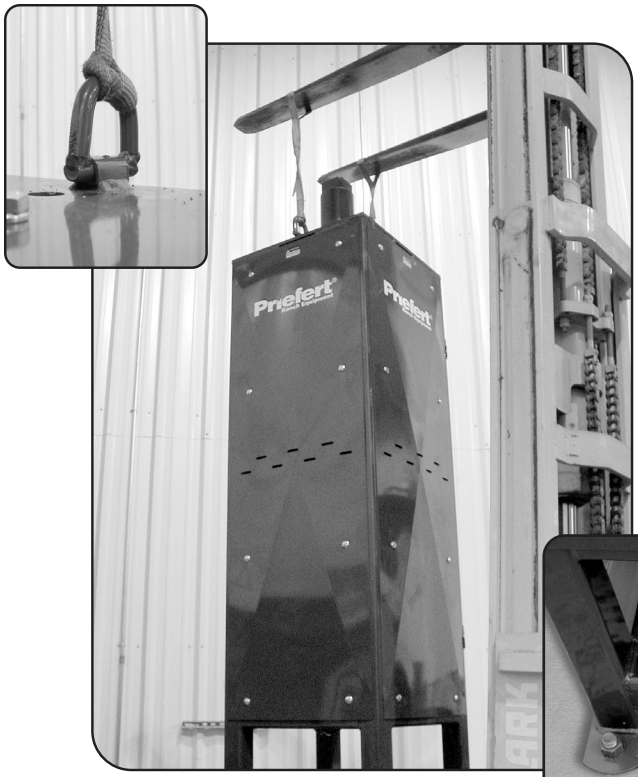

3. To set the Base Assembly to the Concrete Pad, attach a chain or strap to the lifting eyes on each side at the top of the Walker Base and raise the walker with a forklift or front end loader.

NOTE: The Base weighs approximately 1200 lb. Be sure the equipment used for lifting the Base is able to handle this working weight.

USE CAUTION TO PREVENT STRAP OR CHAIN DAMAGING BRUSH ASSEMBLY FOR HANGING PANELS (See picture at right).

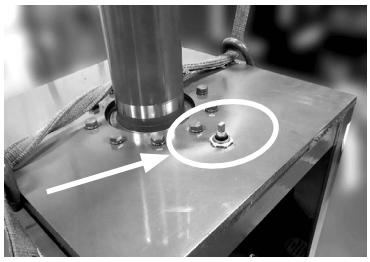

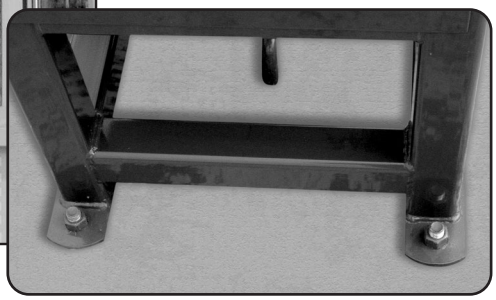

Make sure the walker is **level**, put anchor bolt nuts on and tighten.

REMINDER: BE SURE TO INSTALL BREATHER AS SHOWN ON PREVIOUS PAGE

---

4. To attach Tree, use a chain or strap to attach to the lifting eye at the top of the walker Tree. Pick up the Tree and slide it over the main shaft.

When the Tree is all the way down, rotate to make sure it slides down and locks in place on the main shaft.

USE CAUTION NOT TO DAMAGE BRUSH ASSEMBLY AS SHOWN IN PREVIOUS STEP. BRUSH ASSEMBLY WILL CONTACT BASE OF TREE.

---

5. To install the arms of the walker, attach the Inner Arms to the Tree with the ⅞" x 5" bolts provided. Raise the Inner Arm and bolt it to the Support Strap with the ⅝" x 1½" bolts.

Note: *Do not install the **nuts** for the 7/8" x 5" bolts until all arms have been installed. This will allow bolts to slide out to allow the next arm bolt to be installed. Once all arms have been installed, then install and tightened all nuts.*

⅞" x 5" Bolts used to attach inner arm to Horse Walker tree.

⅝" x 1½" Bolts used to attach support strap from tree to inner arm.

When installing Outer Arms, be sure mounting bracket for Hanging Panel faces down.

6. Using the procedure in Step 5, attach all four Inner Arms to the Tree.

Slide the end of the Outer Arm over the end of the Inner Arm until the two pieces butt together.

---

7. Locate the four ⅝" Turnbuckles, four 184½" (1/2") Top Cables and four ½" Shackles.

Attach the four top cables to the end of the outer arm with the ½" shackle.

Unscrew the four turnbuckles to the full extension.

Attach one end of the turnbuckle to the cable. Then, bolt the other end of the turnbuckle to the loop at the top of the tree. This will require assistance from someone, or a lifting device, to raise the outer end of the arm to allow enough slack to bolt the turnbuckle to the tree.

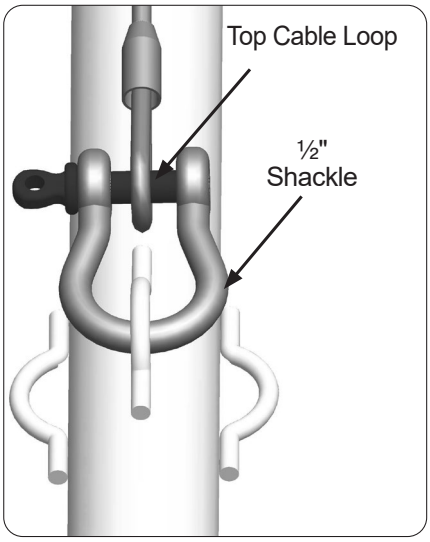

NOTE:

THESE STEPS WILL BE EASIER WITH ASSISTANCE OF ANOTHER PERSON.

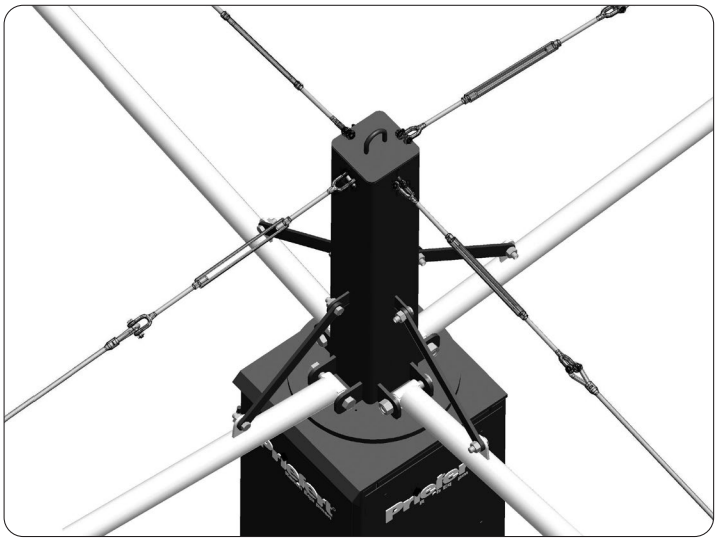

Continue to attach top cables until all four arms are complete. Tighten all of the Top Cables until there is a slight bow in the arm.

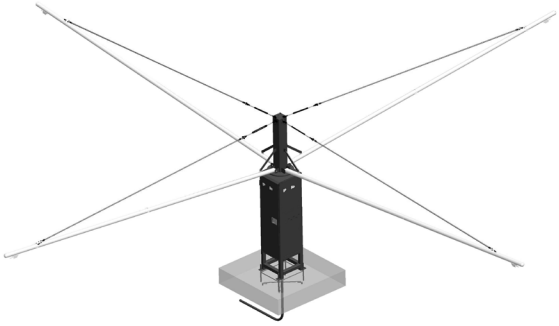

8. Unscrew the four ⅝" Turnbuckles to the full extension.

Lay out the two 138¾" (5/16") Inner Turnbuckle Cables and attach one end of the Turnbuckle to one end of each cable loop as seen below.

Attach a ⅜" Quick Link to the other end.

9. Lay out the two 162¼" (5/16") Inner Cables, then attach to the loops at the center of the arms by using the ⅜" Quick Links. These two cables will attach between opposite arms on either side of the Tree.

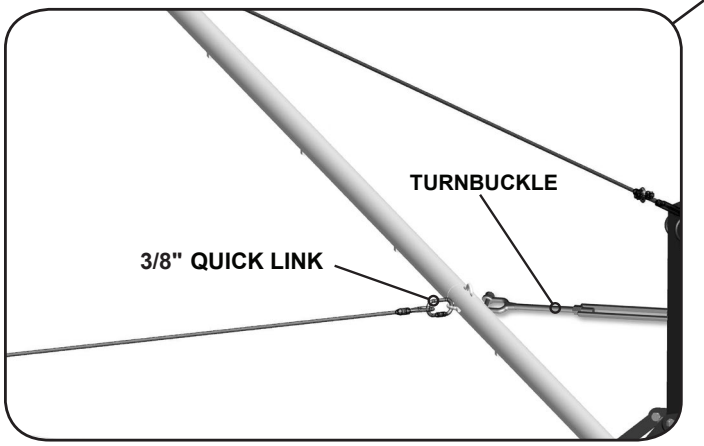

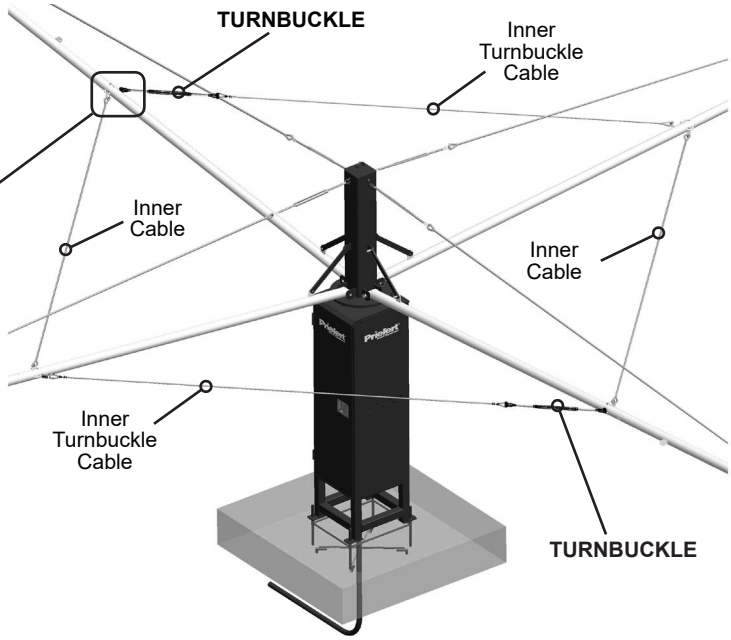

10. Attach the two Inner Turnbuckle Cables from Step 8, between opposite arms using the ⅜" Quick Link on one end and the Turnbuckle on the other. Reverse the location of the Turnbuckle on the opposite side. (See diagram above)

Tighten the Turnbuckles enough to remove the slack of all four inner cables.

NOTE: *DO NOT FULLY TIGHTEN* ANY TURNBUCKLES UNTIL ALL CABLES ARE ATTACHED!

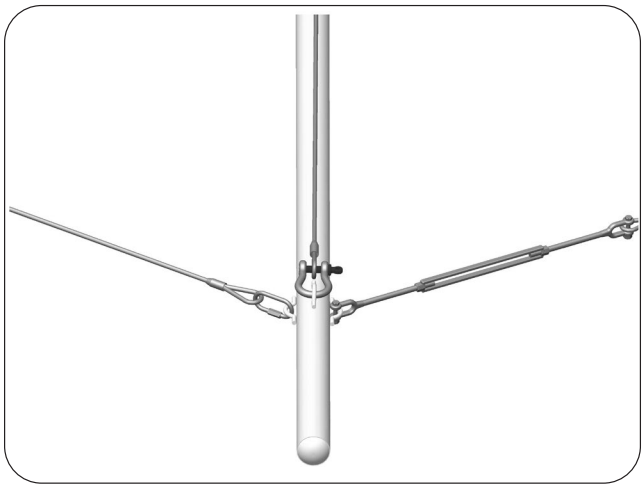

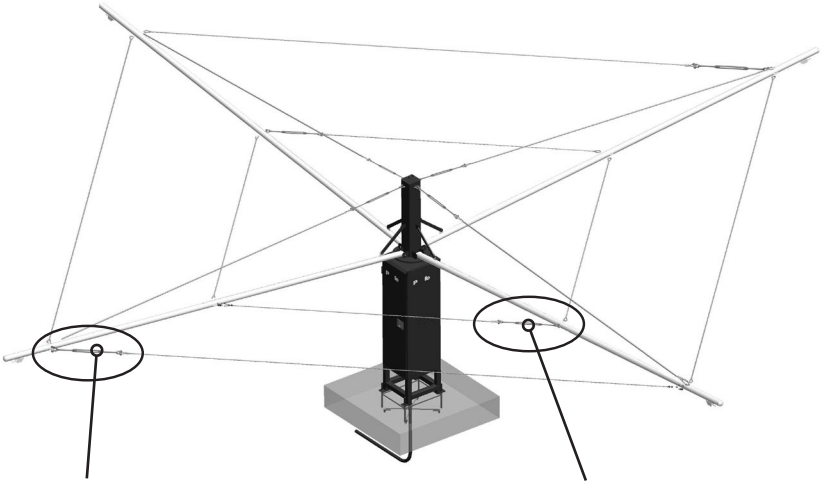

OUTER TURNBUCKLE POSITIONED OPPOSITE OF INNER TURNBUCKLE

11. Use the same procedures as in Step 9 & 10 to assemble the Outer Cables.

Lay out the two 302" (5/16") Outer Cables, then attach to the loops at the ends of the arms by using the ⅜" Quick Links.

These two cables will attach between opposite arms on either side of the Tree as before.

12. Lay out the two 280½" (5/16") Outer Turnbuckle Cables and connect one ½" Turnbuckle to the loop in the end of each cable.

Attach these two cables between opposite arms using a Quick Link on one end and the Turnbuckle on the other.

Position the outer Turnbuckle opposite to the Turnbuckle of the Inner Cables. (See above)

After all of the cables are in place, the top Turnbuckles may need to be tightened again.

NOTE: WHEN TIGHTENING CABLES, BE SURE TO TIGHTEN TURNBUCKLES UNIFORMLY TO PREVENT WARPING OR BOWING OF THE ARMS.

Dimensions for Inner & Outer Round Pens

41' - 8"
Outer Curved Panels

Outer Pen:
HW4PCPSBO-15
HWRPBG-1
HWPSPO4SB-1

40' - 2"
Clearance for
Hanging Panels

TURNBUCKLE

25' - 0"
Clearance for
Hanging Panels

Inner pen:
HW4PCPSBI-8
HWRPBG-1
HWPSPO3.5SB-1
HWPSPO2SB-1

24' - 0"
Inner Curved Panels

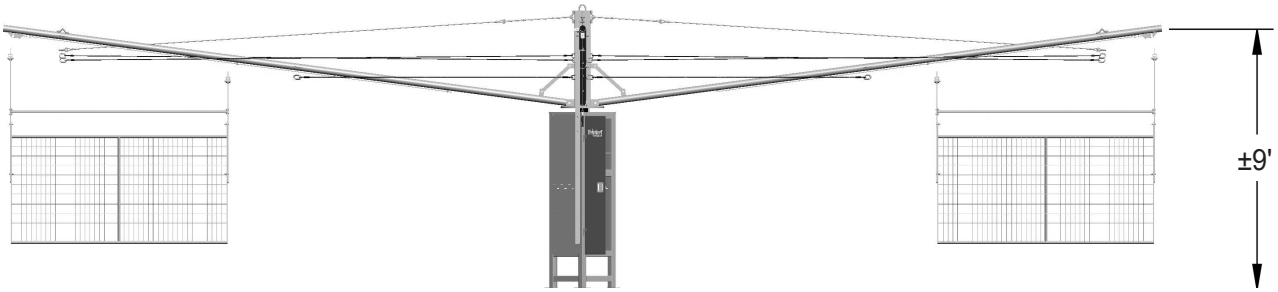

Be sure to use the proper anchoring methods in the following pages to insure a quality, professional installation for your particular needs and requirements.

SEE CRITICAL DIMENSIONS ON PAGE 08

Hanging Panel & Stabilizer Assembly

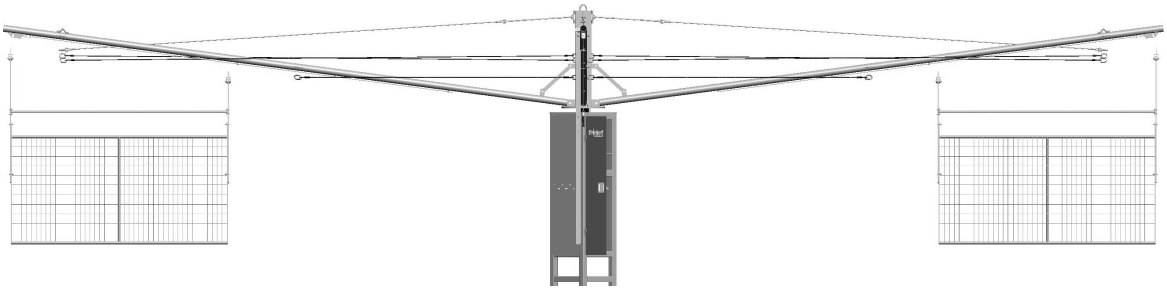

1. After all cables are tightened, bolt the panel straps to the mounting ears on the arms. The bolts are assembled on the brackets of the Panel Straps. Remove the bolts from the end of the brackets and install in the mounting ears on the arm. The short Panel Strap will go into the inner mounting ear and the long Panel Strap will go into the outer mounting ear. (See examples pg. 08) There are more holes in the outer strap then there are in the inner strap.

NOTE: Install the outer strap with the "WARNING" label facing outward.

2. Install the Hanging Panel onto the Panel Straps you just assembled. With the help of another person, lift the panel where the bottom of the panel is 16"- 20" off the ground. The panel must hang level. (See detail at bottom of pg. 08). Use four ½" bolts & locknuts to attach. Be sure to note which holes you used and bolt the remaining panels in the same position.

3. Allow a few holes above the Hanging Panel and attach the Stabilizer Bar between the Panel Straps using four ½" bolts & locknuts. (See pg. 08)

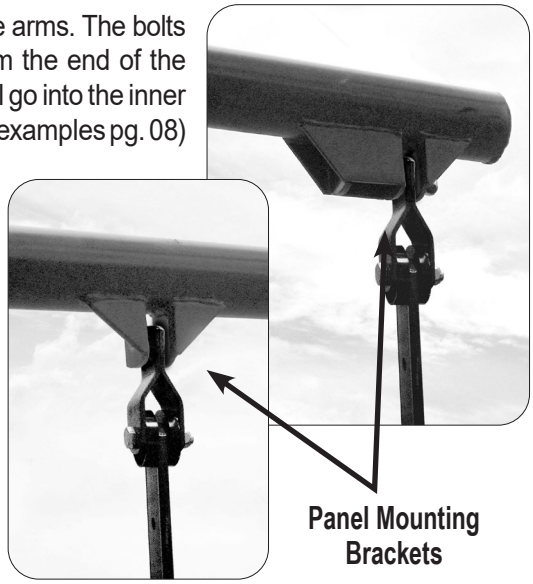

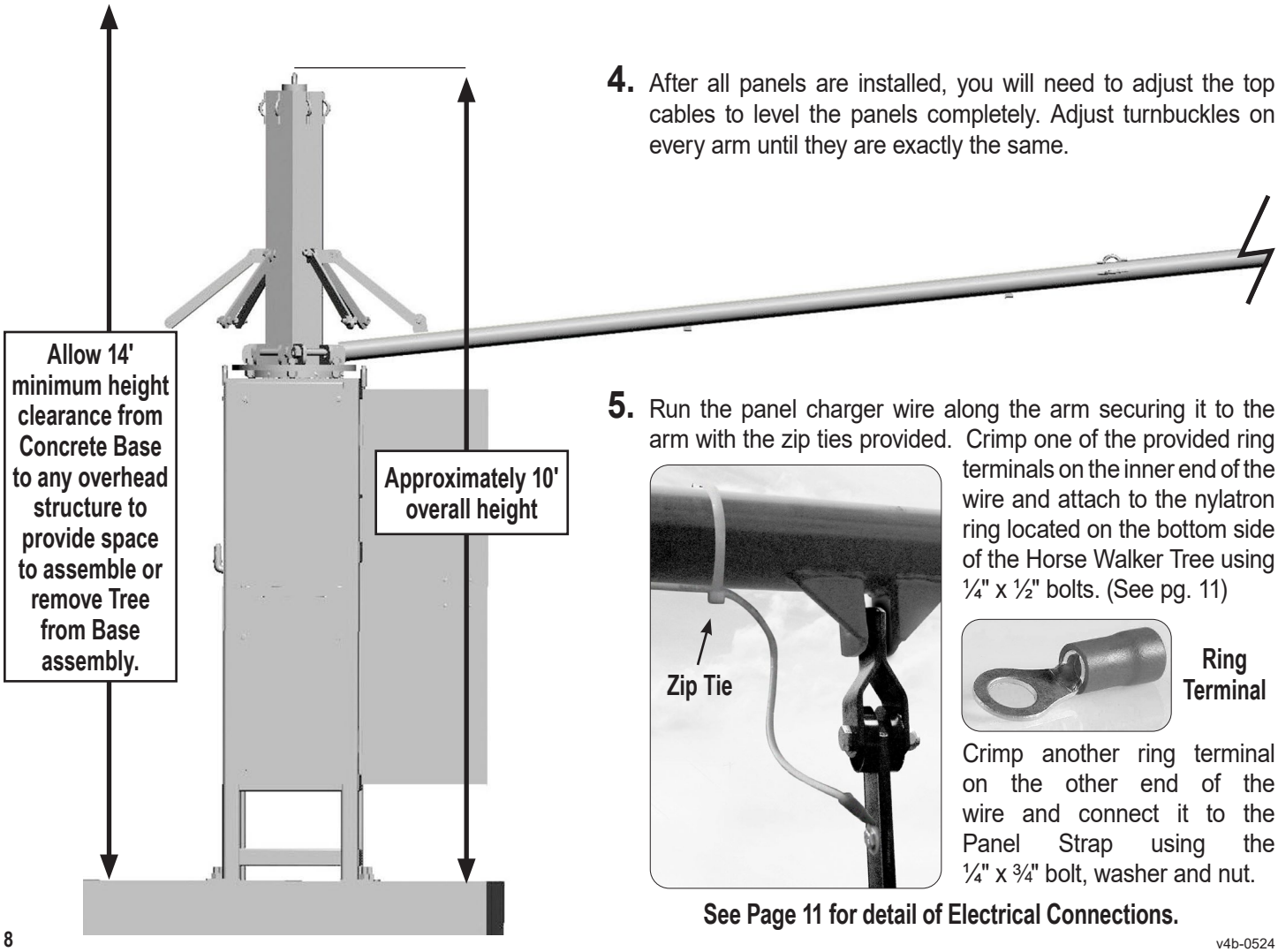

4. After all panels are installed, you will need to adjust the top cables to level the panels completely. Adjust turnbuckles on every arm until they are exactly the same.

5. Run the panel charger wire along the arm securing it to the arm with the zip ties provided. Crimp one of the provided ring terminals on the inner end of the wire and attach to the nylatron ring located on the bottom side of the Horse Walker Tree using ¼" x ½" bolts. (See pg. 11)

Ring Terminal

Crimp another ring terminal on the other end of the wire and connect it to the Panel Strap using the ¼" x ¾" bolt, washer and nut.

See Page 11 for detail of Electrical Connections.

CRITICAL DIMENSIONS

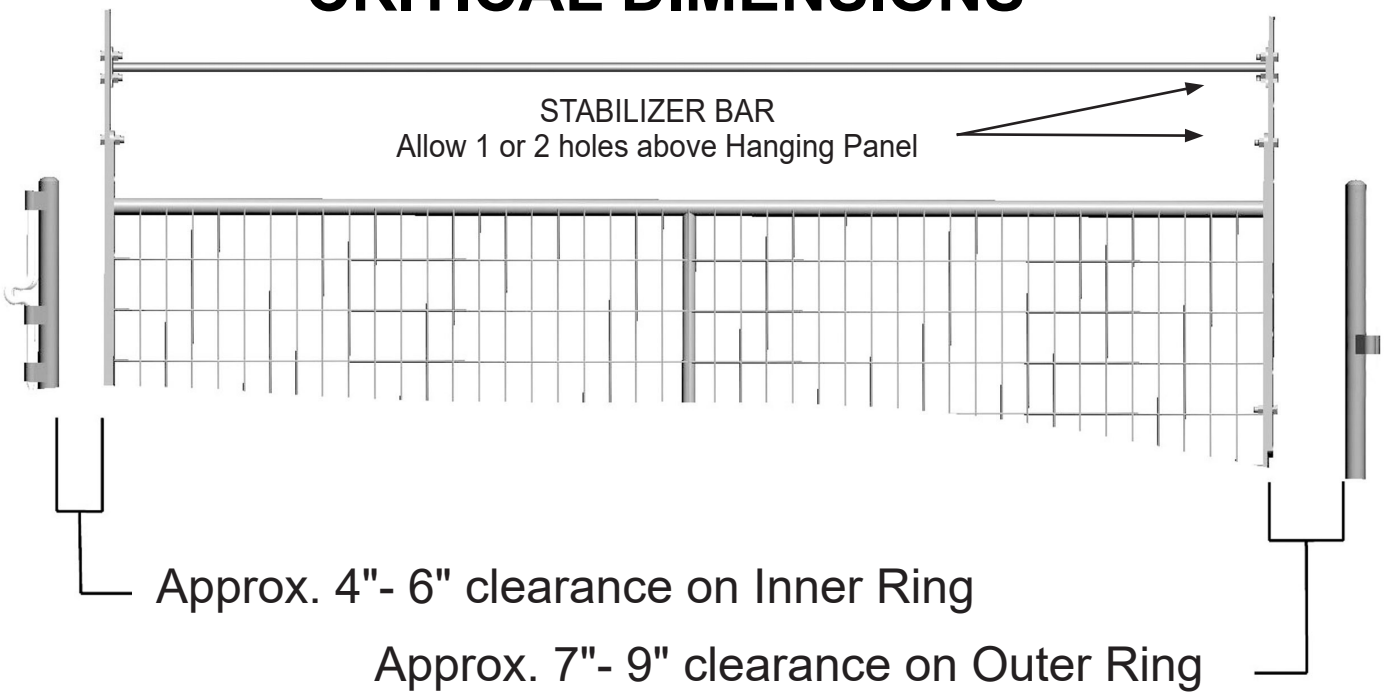

Make sure when assembling Round Pen that ample clearance is provided to allow Hanging Panel to rotate freely inside. Location of Inner Ring and Outer Ring is very important for proper operation of the Panel Walker. Review pages 06, 09 & 10 for proper clearances.

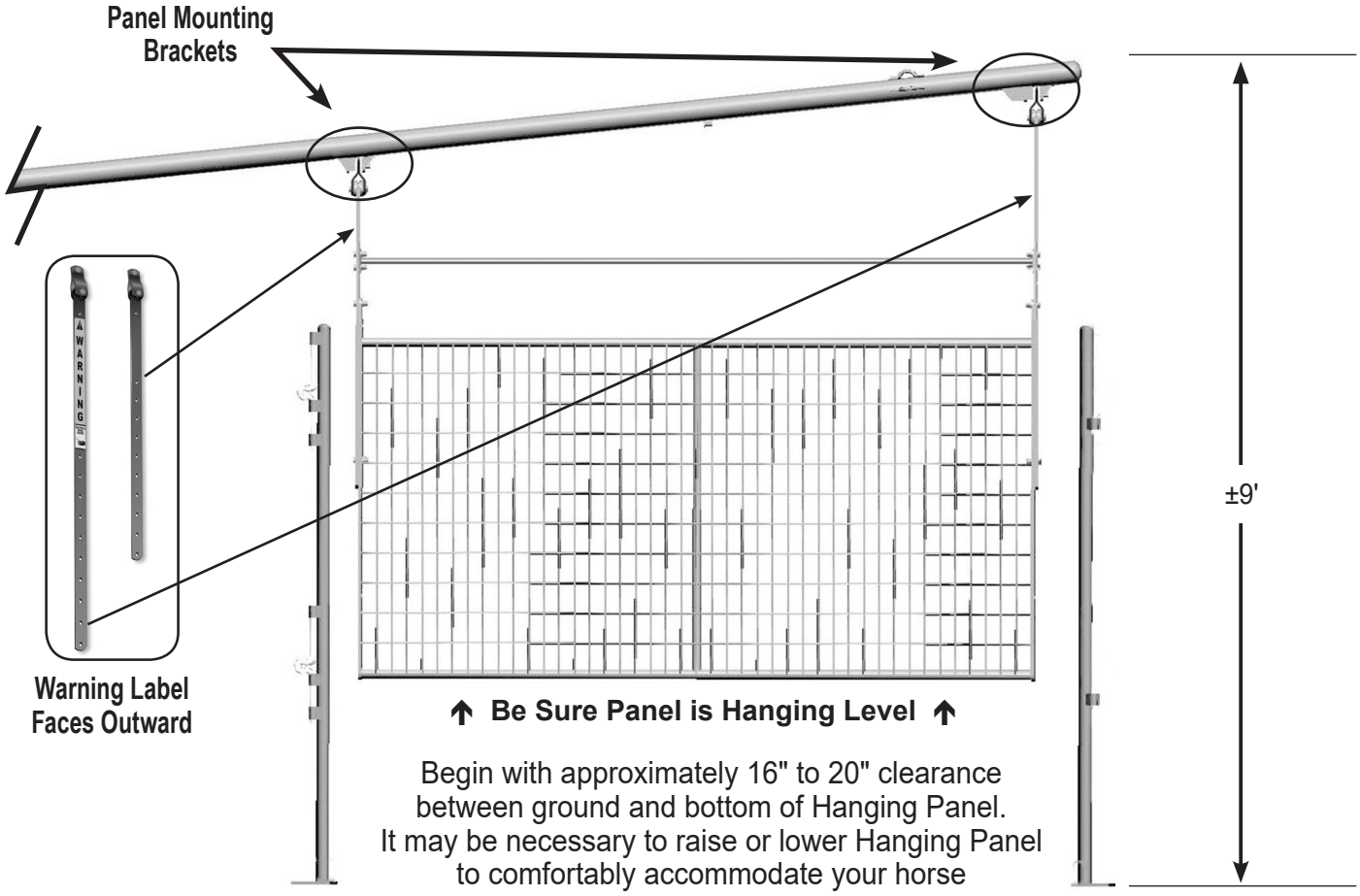

Round Pen Assembly

Read Before Beginning:

Determine location of Inner Bow Gate, and at 12' from center. Rotate the Horse Walker Tree around until there is a hanging panel in-line with the hinge side of Bow Gate. ***Be sure to install an Anchor Stake Clip in the bottom of each panel before locating and attaching panel.*** As you install the gate and curved panels, adjust the Round Pen panels around until there is approx. 4"- 6" of clearance between the hanging panel and curved panel on the Inner Ring and approx. 7"- 9" on Outer Ring, as shown on page 08, under *Critical Dimensions*. After the Bow Gate and first curved panel is in place, drive one Stake ***half-way*** into the ground, (Partially drive stakes to hold panels in place - you may have to remove previously driven stakes for adjustments) going through the holes of the Anchor Stake Clips. Repeat as you work your way around with curved and flat panels until you work all the way around to the Bow Gate.

NOTE: Do not drive stakes completely into the ground until all panels are assembled and located to allow for adjustment if needed.

Inner Ring - First

1. Locate position for the inner Bow Gate. Attach the Bow Gate to a curved Inner Panel using the connector pins. Be sure the Anchor Stake Clips and the latching pins face toward the center of the Horse Walker as shown in DETAIL A. Drive one Anchor Stake, through hole in the clip, half-way into ground

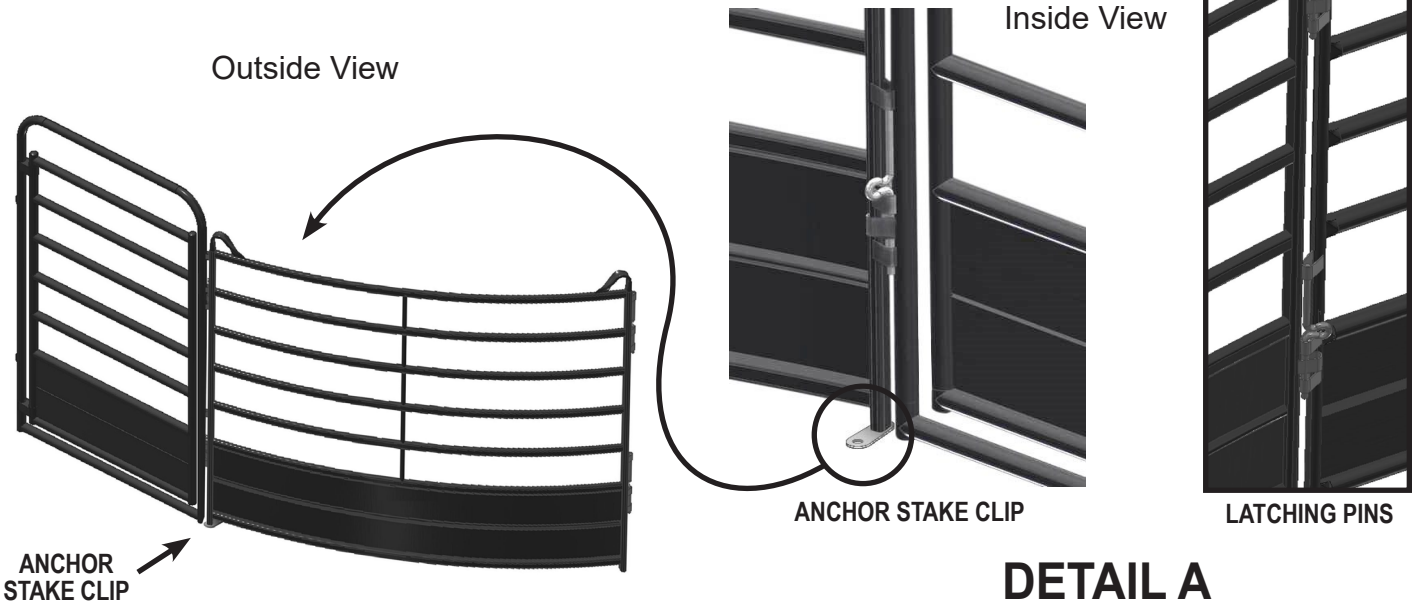

DETAIL A

2. Locate a second curved Inner Panel and attach it to the previous panel using the latching pins. Be sure you have inserted the Anchor Stake Clip, and that it faces towards the center of the ring. As you are installing the panels, manually turn the Horse Walker Hanging panel that is attached to the arm, rotating around to each panel to make sure there is the proper clearance. After clearance is achieved, drive Stake through hole on Anchor Stake Clip, *half-way* into ground as you work your way around.

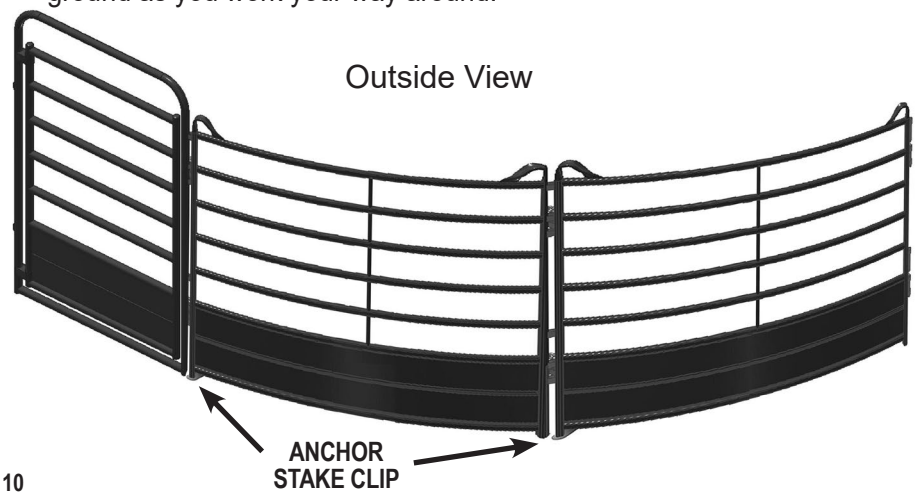

3. IMPORTANT:

After the third or fourth curved panel, connect the 4' panel. Adjust for proper clearance as with the curved panels.

Install two more curved panels, then connect the 2' panel and again, adjust for proper clearance.

Study the diagram on the next page for general locations for 2' & 4' flat panels.

Continue installing panels around Inner Ring to meet the Latching pins on the Bow Gate.

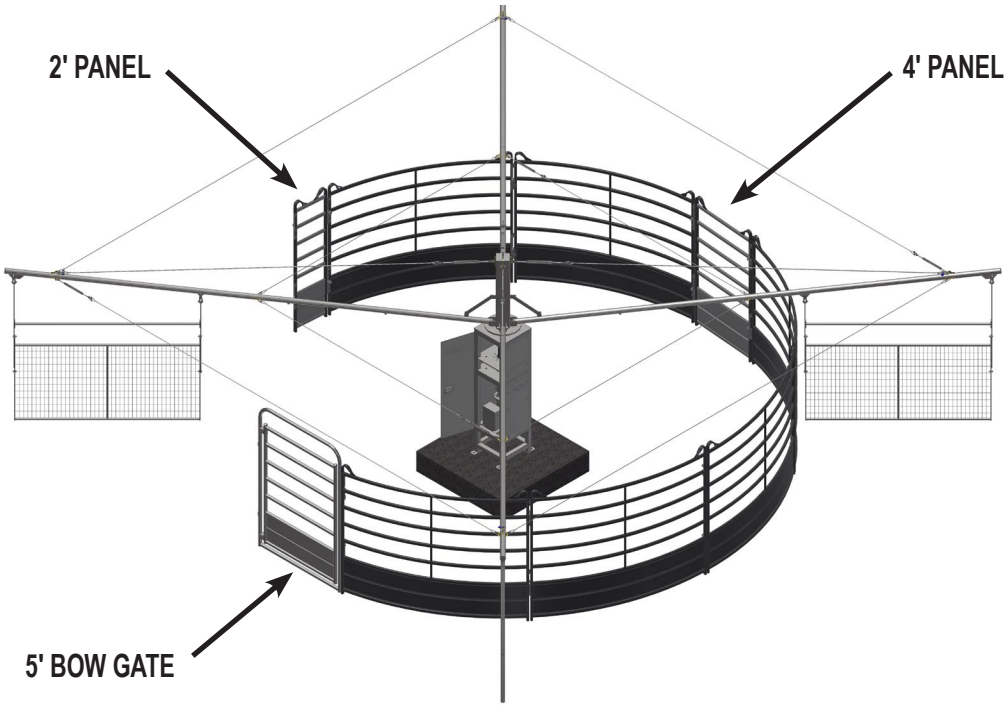

ATTENTION:

TO ACHIEVE PROPER CLEARANCE AND SPACING, BE SURE TO INSTALL 2' & 4' FLAT PANELS OPPOSITE OF BOW GATE, WITH TWO (2) or THREE (3) CURVED PANELS IN BETWEEN.

Outer Ring - Second

4. Following the procedure used for the Inner Ring, locate the Bow Gate for the Outer Ring, directly across from the Inner Bow Gate at 20'-10" from center. Connect the flat 3.5' Panel. Insert Anchor Stake Clip into bottom of panel leg. **Be sure the holes on the Anchor Stake Clip face *outward*, away from the center of the ring.** After proper clearance is achieved, drive a Stake through the hole on Anchor Stake Clip, *half-way* into ground as with the inner ring. Connect a curved Outer Panel as with Inner Ring step 1. Place another Panel and continue around Outer Ring. Again, manually turn the Horse Walker Hanging Panel around to each panel to make sure here is the proper clearance around the entire outer ring.

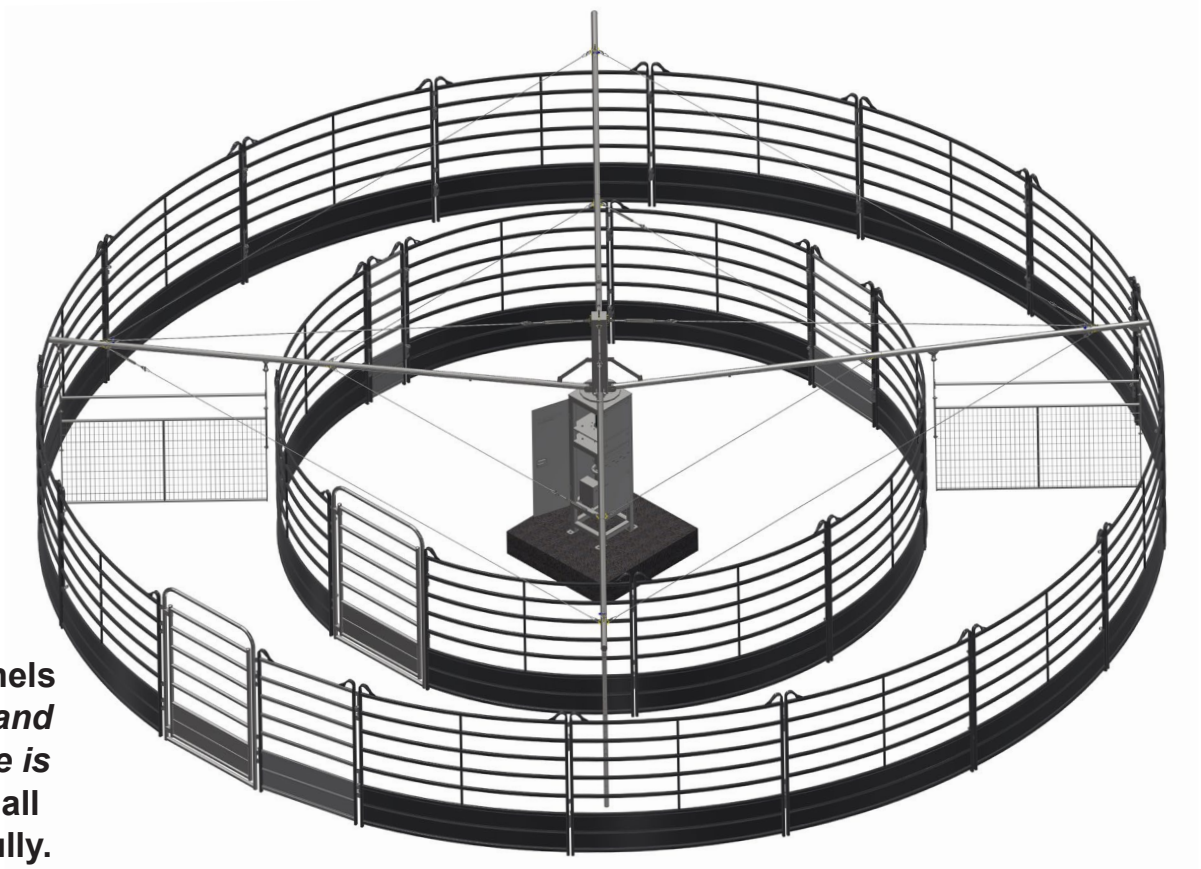

REMINDER:

Only after *all* panels are assembled, *and proper clearance is achieved*, drive all anchor stakes fully.

Hanging Panel Electrical Connections

1. Attach each electric wire to each panel by placing the ¼" x ¾" bolts and nuts provided through the drilled hole on the Short Arm Attachment. (See Step 3 pg. 09)

NOTE:
Be sure enough slack is given for panel movement.
Swing Panel several inches in each direction to be sure there is ample free-play in the wire.

2. Attach the other end of each wire to the base of the Tree (See image above).

3. Drive a 6' ground rod beside the walker base and attach a #6 copper ground wire to the ground rod and to the green terminal on the charger.

Horse Walker Electrical Connections

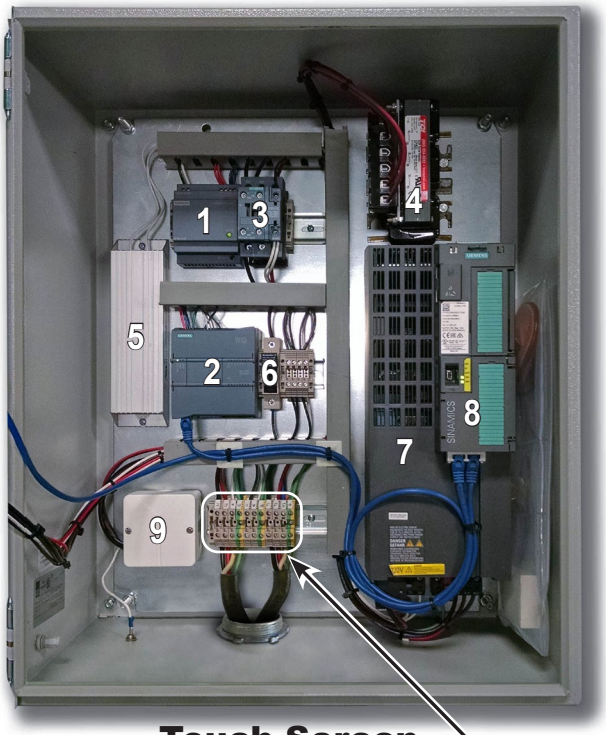

Touch Screen
Control Panel

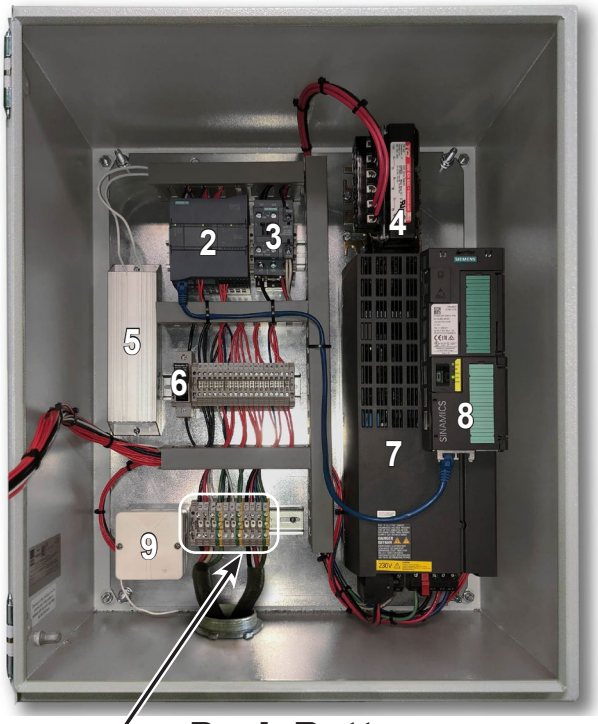

Push Button
Control Panel

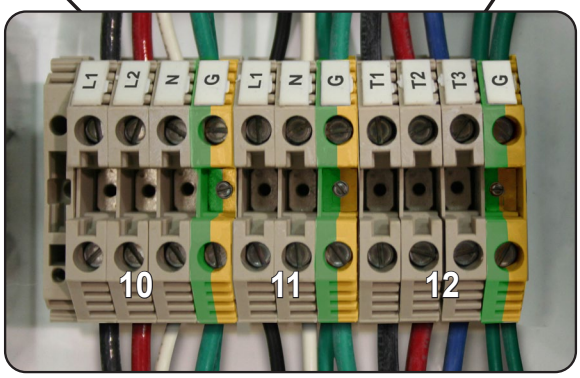

Terminal Strip

See following page for full object descriptions

Horse Walker Electrical Instructions (cont.)

A <u>certified electrician</u> must install wiring and wire motor control.
Be sure to follow all electrical codes for your area.

WARNING: *PRIEFERT MANUFACTURING RECOMMENDS THAT ALL WIRE BE RUN THROUGH ELECTRICAL GRADE CONDUIT TO PREVENT INJURY OR DEATH DUE TO ELECTROCUTION HAZARD AND/OR DAMAGE TO EQUIPMENT.*

CONTROL PANEL DESCRIPTIONS FROM PREVIOUS PAGE

1. 24v Power Supply
   (Touch Screen Control Panel Only)
2. PLC
3. Motor Starter Relay
4. Line Reactor
5. Braking Resistor
6. 10 Amp Fuse
7. Motor Drive VDF
8. VDF Power Unit
9. Remote Receiver
10. Incoming Power (See diagram above)
    30amp double pole breaker from Main Power Supply - Four (4) #10 Wires
    L1 *Black - Hot;* **L2** *Red - Hot;* **N** *White - Neutral;* **G** *Green - Ground*
11. Outgoing Power To Charger (See diagram above)
    to Walker - Three (3) #12 Wires
    L1 *Black - Hot;* **N** *White - Neutral;* **G** *Green - Ground*
12. Outgoing Power To Walker Motor (See diagram above)
    to Walker - Four (4) #10 Wires
    T1 *Black - Hot;* **T2** *Red - Hot;* **T3** *Blue - Hot;* **G** *Green - Ground*

Basic Wiring Diagram

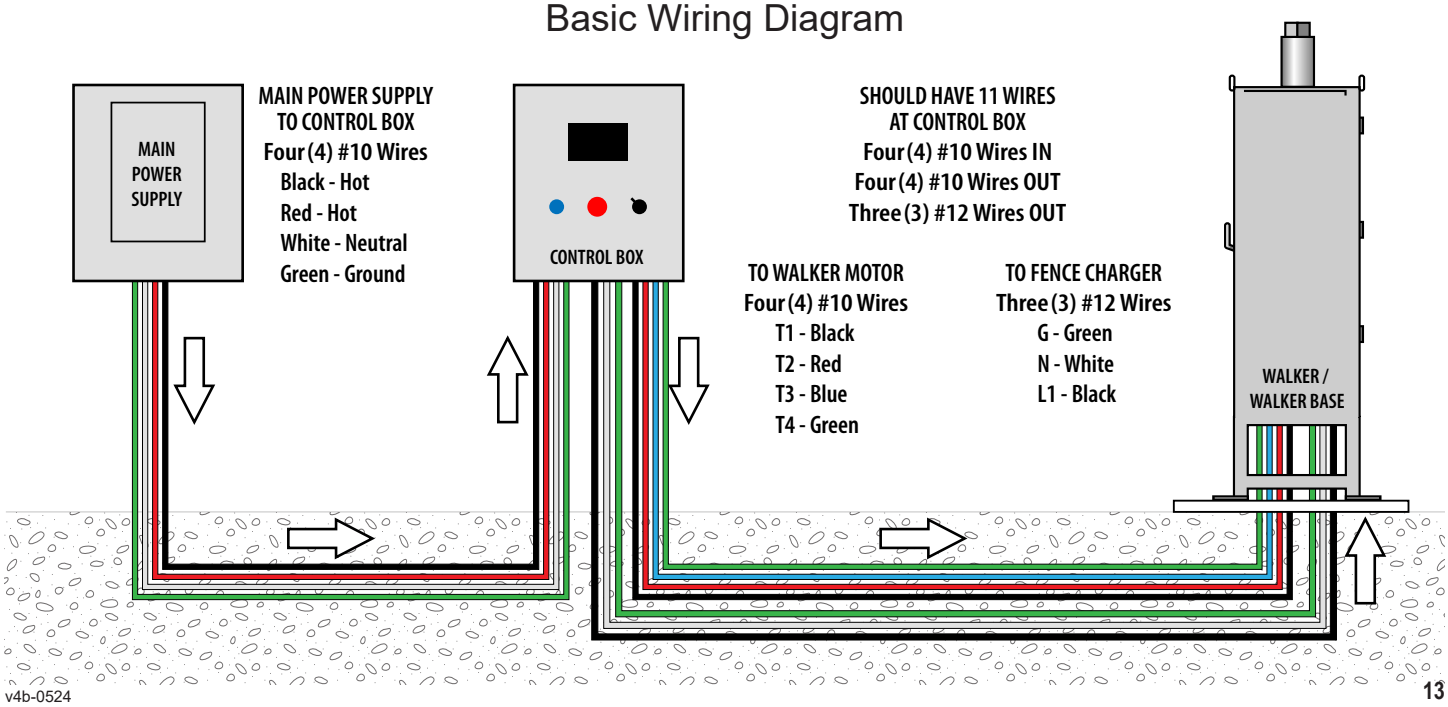

The Remote Control for the Horse Walker comes pre-programmed from the factory.

Programming is only necessary if additional, or replacement Remote Control is purchased.

Programming an Additional or Replacement Remote Control for the Automatic Horse Walker

Read These Instructions Completely Before Beginning

Note: The circuit board allows for *4 seconds* between pressing the Programming Button to activate the function light, and pressing the corresponding button on the remote.

Tools required: Flat-head screwdriver and Phillips screwdriver.

Using a flat-head screw driver, turn the two latch screws counter-clockwise to open the Control Panel Box. Refer to Fig.1 for circuit board Box location.

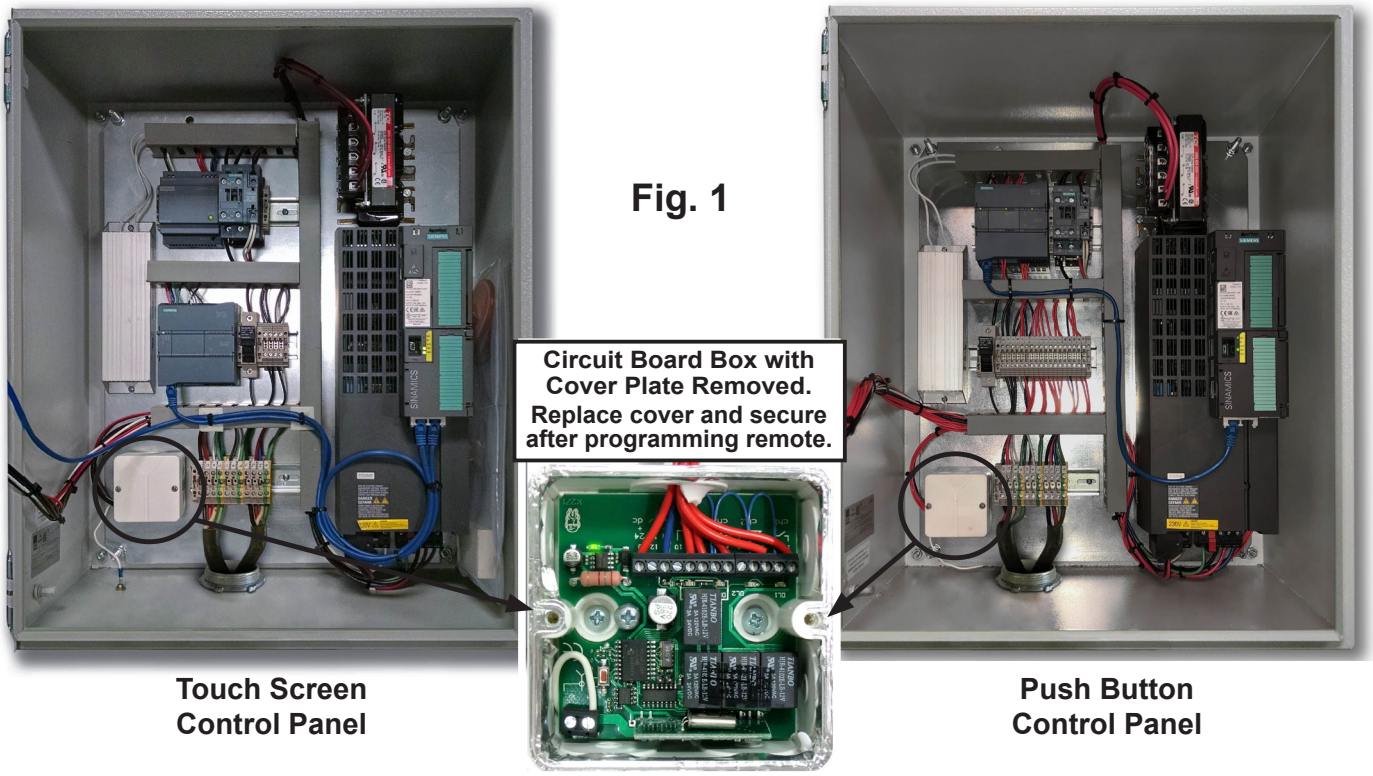

Fig. 1

Touch Screen Control Panel

Push Button Control Panel

Circuit Board Box (Fig. 1)
Using a Phillips screwdriver, remove the cover from the Circuit Board Box.

Turn on the power to the Control Panel. Top left Green Light on Circuit Board will be on when power to Control Panel is ON.

See next page for Programming the Remote Control

NOTE: This equipment has been tested and found to comply with the limits for a Class A digital device, pursuant to part 15 of the FCC Rules.[2]

REMEMBER: The circuit board allows for *4 seconds* between pressing the Red Programming Button to activate the LED function light, and pressing the corresponding button on the remote.

1 Press Red Programming Button

Press and hold the red Programming Button until the 1st function light (Red LED) comes on. Immediately press the "O/1" button on the Remote.
— the red LED light will blink.

This Function Light will appear (Red LED)

Then Press this button on the Remote

2 Press Red Programming Button

Press the red Programming Button again,the 2nd function light (Red LED) will appear. Immediately press the "Faster" button on the Remote.
—the red LED light will blink.

This Function Light will appear (Red LED)

Then Press this button on the Remote

3 Press Red Programming Button

Press the red Programming Button again, the 3rd function light (Red LED) will appear. Immediately press the "Slower" button on the Remote.
— the red LED light will blink.

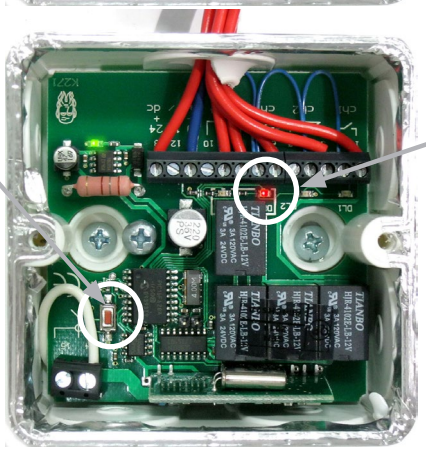

This Function Light will appear (Red LED)

Then Press this button on the Remote

4 Press Red Programming Button

Press the red Programming Button again, the 4th function light (Green LED) will appear. Immediately press the "Fwd/ Rev" button on the Remote.
— the green LED light will blink.

This Function Light will appear (Green LED)

Then Press this button on the Remote

Your replacement Remote is now programmed to operate.

Wait for the four function lights to shut off before powering off the Control Box.

Replace the cover on the Circuit Board Box and close the Control Panel Box. You may now begin using your Priefert Horse Walker.

Horse Walker Operation Instructions

TOUCH SCREEN CONTROL PANEL

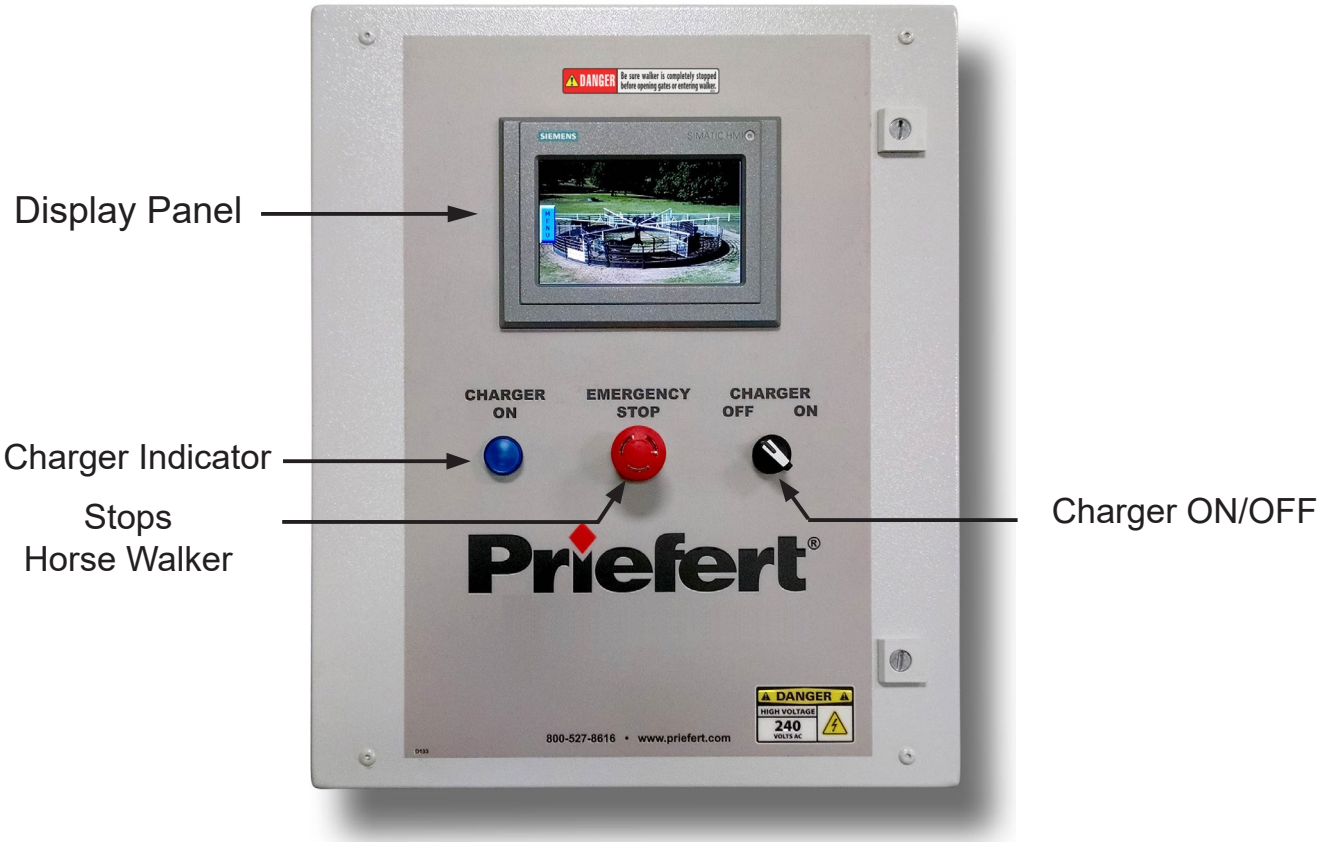

Key Features on the Touch Screen Control Panel:

- 25 second “ramp up” time from start to the desired speed setting helps ease horse into a walk.
- 25 second “ramp down” time from engage to full stop.
- Remote control that allows the operator to Start/Stop, change direction (Forward/Reverse), as well as increase or decrease speed; all with a push of a button.
- Convenient switch to allow low impedance electrical pulse to hanging panels, encouraging horses to keep pace, which can be turned off as horses become accustomed to routines.
- Customized programming to set-up automated exercise routines. Each routine can be programmed with up to 12 steps for changing pace, direction, etc.
- Flexibility to choose Programmed Routines or use the Manual option.

Additional Features of the Touch Screen

The Start Screen appears after powering up the control panel.

Pressing the **“MENU”** button accesses the functions of the Walker.

After 30 minutes, the display screen goes to screen-saver. Touching returns to the last screen opened.

Section 1: MANUAL CONTROL Tab:

This tab displays the options for Manual Operation.

The Time and Speed of operation must be selected first

- Time can be set by touching 15 minutes, 30 minutes or 60 minutes. Touching button again will increase the time to a maximum of 60 minutes. Time selected will appear in the vertical indicator bar on the right, and Time Remaining will count down when Walker is started.
- Speed can be set by touching the up or down arrow buttons. The up arrow increases speed, down arrow decreases speed. This will show as miles per hour (MPH) to a maximum of 16.0 MPH. Tapping the speed indicating window will allow manual entry of the desired speed.
- Clockwise or Counter-Clockwise operation can be selected by touching the Direction Button. Direction can be changed anytime during operation, Walker will ramp-down, stop, then reverse and ramp-up again to the selected speed.
- Once the Time and Speed has been selected, touching the green start button will begin operation, and walker will ramp-up to the selected speed for the selected time. Walker can be Paused or Stopped any time during operation, but the countdown time remains when paused. Pressing Stop will Reset time to zero.

Options for Remote Control Operation.

Walker Operation Using the Remote Control Differs from Manual Operation

- If no time has been selected in Manual Operation, Time will default to 15 minutes when "**0/1**" button is pressed for 3 seconds. Walker will ramp-up to the previously set MPH.
- Pressing "**Faster**" will increase Walker speed, pressing "**Slower**" will decrease Walker speed.
- Change direction by pressing "**Fwd/Rev**".

NOTE: ***When Walker is operating, press and hold "0/1" for <u>three (3) seconds</u> to pause Walker. Once paused, press and hold the "01" button for <u>three (3) seconds</u> to restart.***

REMOTE CONTROL FUNCTIONS

SET TIME

SET SPEED

SELECT DIRECTION

TOUCH START

Section 2: RUN ROUTINE Tab:

This tab displays the options for pre-set Routines.

Select a Routine by Touching the Pop-Up Menu.

- Any Routine that has been set-up will appear in the pop-up menu. Select the Routine to run and touch the green START button.
- Time duration and speed for each Step of the Routine will be displayed on the right of the screen. PAUSE the Routine at any time, then RESUME to continue the Routine. Touch END to cancel the Routine.
- Priefert has provided a default Routine as an example of how to set-up a simple warm-up. This or any Routine can be revised to meet specific requirements. The next section provides instructions to set-up a Routine.

SELECT ROUTINE

Section 3: SET-UP ROUTINE Tab:

This tab displays the functions to Set-Up Routines.

Set-Up Routines with multiple Steps and durations.

- Touch New Routine button . Key-in the name of the new Routine to set-up. Touch the first STEP of the Routine.
- Touch, then key-in SPEED, TIME, select DIRECTION, then touch Next to finish each STEP of the Routine, and move to the next. Repeat this for additional steps in the Routine. Touch **END?** to finish ***all*** Steps of the Routine. Touch Save button , to save the Routine.
- Any saved Routine can be changed or revised, then saved as a new Routine by touching Save As , then rename the Routine. Use Delete to remove Routines.
- The Routine Listing button allows Routines to be renamed or listed sequentially

SET-UP ROUTINE

Section 4: MAINTENANCE Tab:

This tab displays the Maintenance functions.

Several functions reside in the Maintenance tab window.

- MACHINE SETUP - This button opens a Login for service technicians, and information set by Priefert only. It is not needed for normal operation of the Walker or its functions.
- CLEAN SCREEN - This button disables the Touch Screen for 60 seconds to allow cleaning without activating other functions of the Walker.
- English / Español - Change language of Touch Screen.
- ALARM HISTORY - This button displays alarms and faults and allows them to be reset. See Section 5 for detailed information about alarms and faults.
- START UP SCREEN - Returns to initial Start up screen.
- VIDEO - This button launches the media player application, for future functionality, but is not currently active.

MAINTENANCE FUNCTIONS

Section 5: MAINTENANCE Tab: ALARM HISTORY

This button displays Alarm History Information.

Alarms & Faults and How to Reset them.

- FAULT ALERTS - This window will appear to alert that a Fault has occurred. Several factors can lead to a Fault Alert such as loss of communications or resistance due to horse activity in the Walker. This condition of "Over-Torquing" will cause a Fault Alarm.
  The screen shown indicates that the horse(s) in the Walker, prevented the Walker from turning freely numerous times within a short period. Touching the RESET button will usually clear an error of this type.
- Faults will be recorded and logged in the Alarm Notification window. If the RED diagnostic notification is visible, the Fault must be resolved. This Fault will be noted in the window to assist in solving the condition that caused the error. The diagnostic notification will turn GREEN when the Fault is resolved.
- VIEW ALARM HISTORY - This button shows if a condition has occurred numerous times to assist in resolving Faults or preventing errors.
  If for any reason an Alarm or Fault can not be solved or will not reset, call Priefert for additional technical assistance.

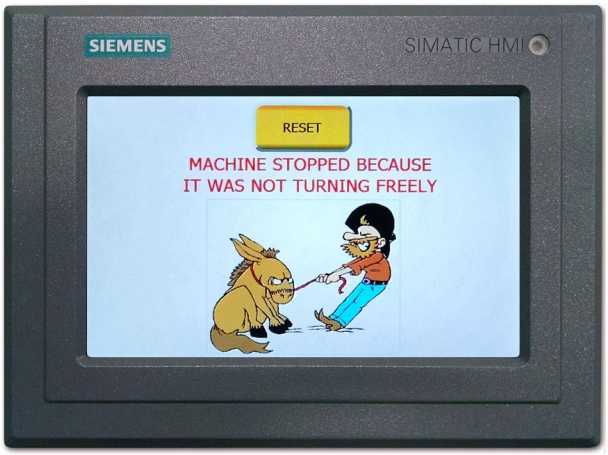

FAULT ALERT

ALARM NOTIFICATION

Section 6: MAINTENANCE Tab: VIDEO

This button activates the Media Player Application.

Currently this performs no function.

- Priefert Manufacturing is constantly advancing the funtionality of its products. As improvements are made, Priefert will update our manuals to reflect these revisions. More information can found on the web at:
  http://www.prieferthorsewalkers.com/
  or by calling toll-free: 1-800-527-8616 during regular business hours..

VIDEO PLAYER

Never leave horses unattended while using Horse Walker.

Horse Walker Operation Instructions

PUSH-BUTTON CONTROL PANEL

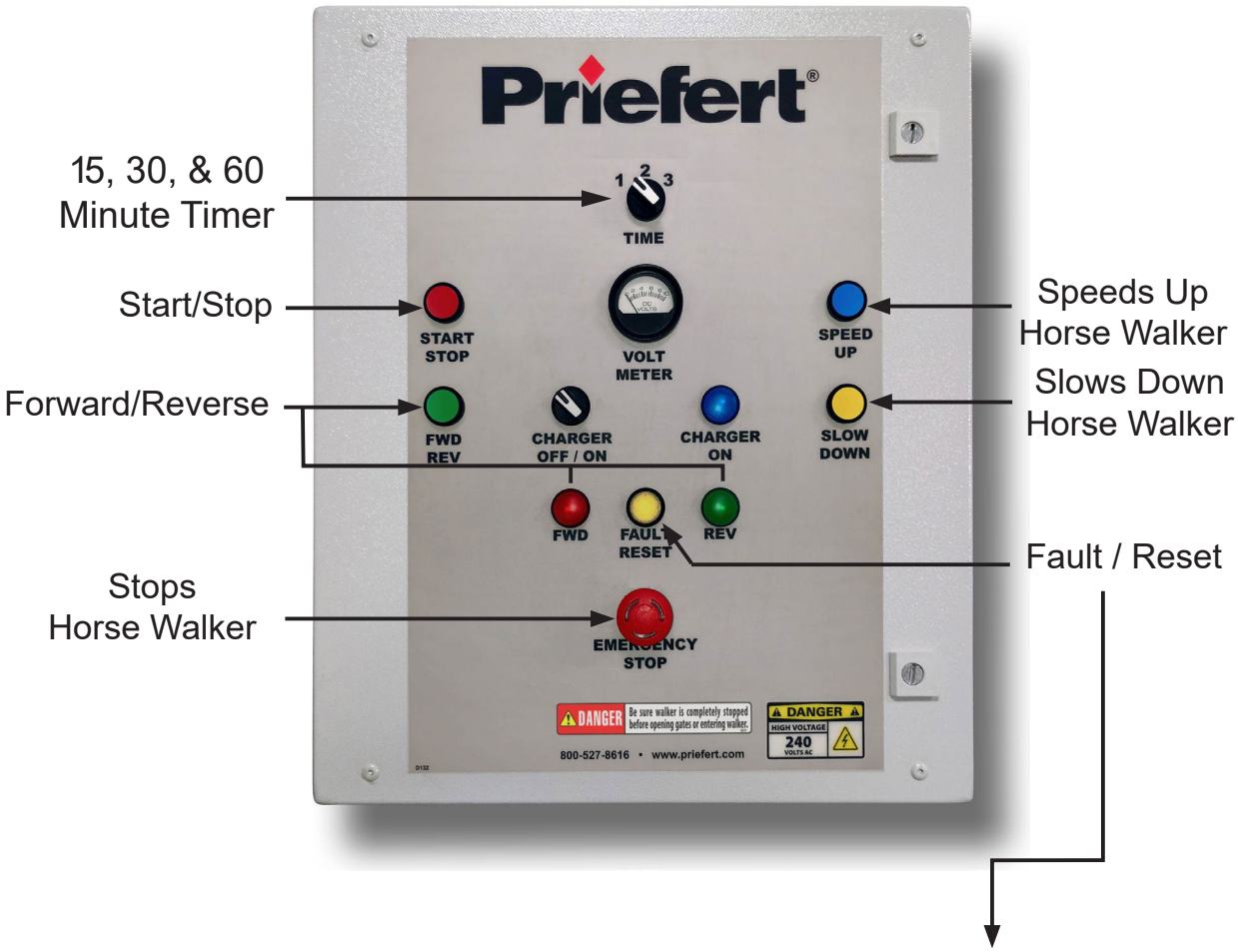

Key Features

- 25 second "ramp up" time from start to desired speed setting to ease horse into walk.
- 25 second "ramp down" time from engaged to stop.
- One of the more unique and outstanding features of this lead walker is the fact that if a horse balks and stops the walker, there is no stress wear on the drive train. The motor simply pauses and then restarts. Horses soon respond to the "pressure and release" training and therefore adapt to the Priefert walker with less resistance and no negative impact on the walker itself.

Fault / Reset

Horse Walker is programmed to require "reset" if animals stop the walker more than 10 times within 60 seconds, or if the horse is able to stop the walker for a sustained 10 seconds.

When fault light is illuminated, press and hold FAULT button for a minimum of 2 seconds. If fault light does not go off and walker does not reset, contact Priefert at 1-800-527-8616.

No Belts To Burn!

Never leave horses unattended while using Horse Walker.

Control Box Pedestal Installation

The optional control box pedestal is designed to house either control box option. Installation requires a concrete anchor bolt kit, allowing the pedestal to be placed next to the horse walker or in a separate location depending on the owner's preference.

Determine Location – *See Page 2 For Concrete Pad Preparations.*

- Once the layout for the Horse Walker is determined, and the outer Panel diameter is located, allow a minimum of 16" from the outermost panels to the backmost edge of the concrete pad of the Pedestal Base.(Page 7 shows dimensions for the Outer Round Pen).
  This means that if the Outer Curved Panels require 41' 8" diameter, Center of Horse Walker Concrete Pad to Center of Pedestal Concrete Pad will be NO LESS THAN 24'.
- When the actual location for the Pedestal is determined, use the following specifications for proper pad installation. All conduit and concrete should be installed at the same time, as well as water line connections for optional Spray Kit (See page 22 for Spray Kit Specifications).
- Follow the general guidelines as the Horse Walker Base for Electrical Connections.
  See Page 12 for Electrical Connections.

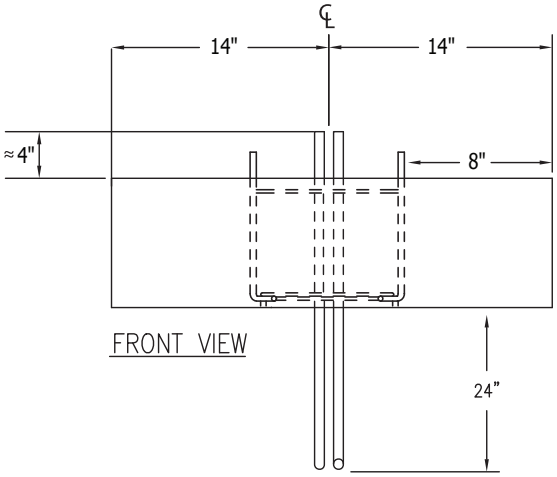

NOT TO SCALE

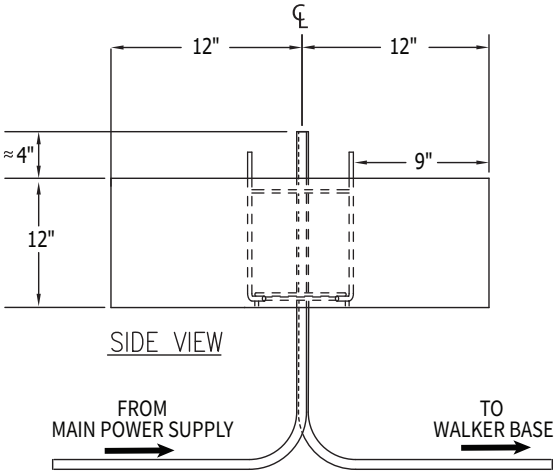

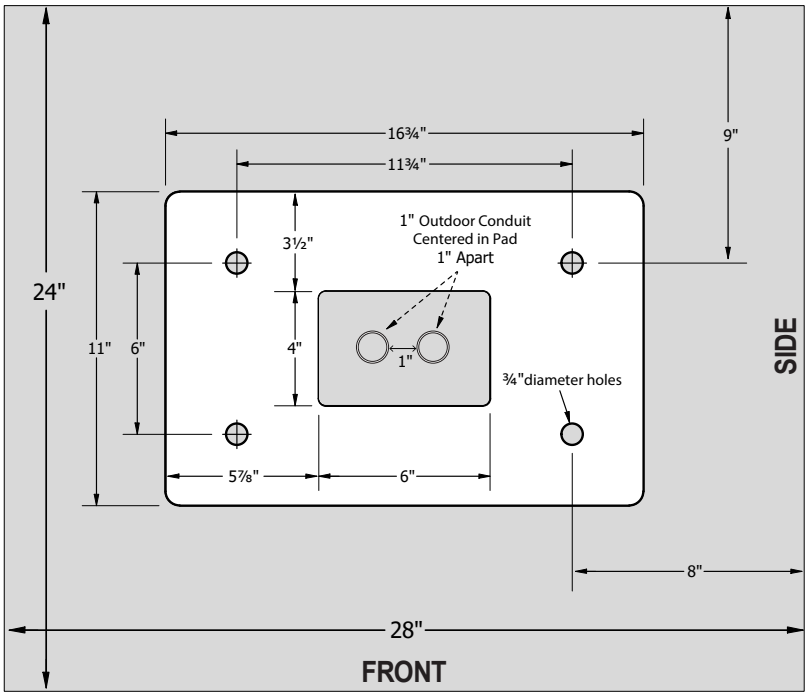

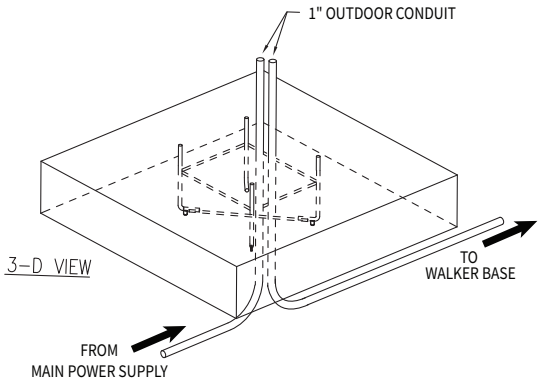

Control Box Pedestal will sit on an anchor bolt pattern of 11¾" x 6".

The 11¾" side will be the front side with the door. Concrete Pad Size will be 28" across the front by 24" along the side and 12"deep.

Follow these diagrams for specific dimensions.

We Strongly Recommend using the included Structural Anchor Bolt Jig

IMPORTANT: IF factory provided Anchor Bolt Jig is NOT used in installation, use INDUSTRIAL GRADE ⅝" anchor bolts.

Optional Spray Kit Installation

Be sure to have a licensed plumber facilitate connections of the water supply. Stub-up waterline where the Water Supply Tee will be located to enable connection. Priefert recommends 3/4" Sch40 PVC, sand sheathed, buried below freeze level.

After completing the assembly of the walker and round pen, determine a location closest to the water supply. *Preferably*, the water supply will be installed during the concrete pad preparation. This allows waterline to be run at the same time as electrical conduit (pg. 1).

If necessary, a water supply may need to be brought to the location of the Horse Walker. If this is the case, water supply ***will have to be*** buried beneath the walker panels and dirt base.

1. Prepare The Nozzles

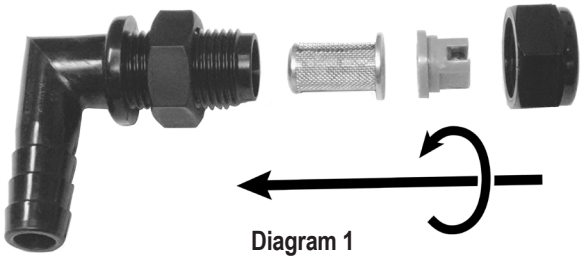

Diagram 1

Unpack and identify all parts before beginning.

Assemble ten (10) Spray Nozzles (See Diagram 1).

Locate Poly Tube and cut ten (10) sections, 2" long.

Insert assembled Spray Nozzles fully into one end of each.

Locate eight (8) PVC Tee fittings and insert into the other end of eight (8) of the tubes on the Spray Nozzles.

Locate two (2) PVC 90˚ fittings, and insert them into the remaining two (2) Spray Nozzle tubes.

Locate the one (1) remaining Tee fitting. This will be used for the connection to the water supply.

Spray Kit installs on the Inner Ring, along the rail at the top of the solid section of each panel, Nozzles facing outward. (See Diagram 2)

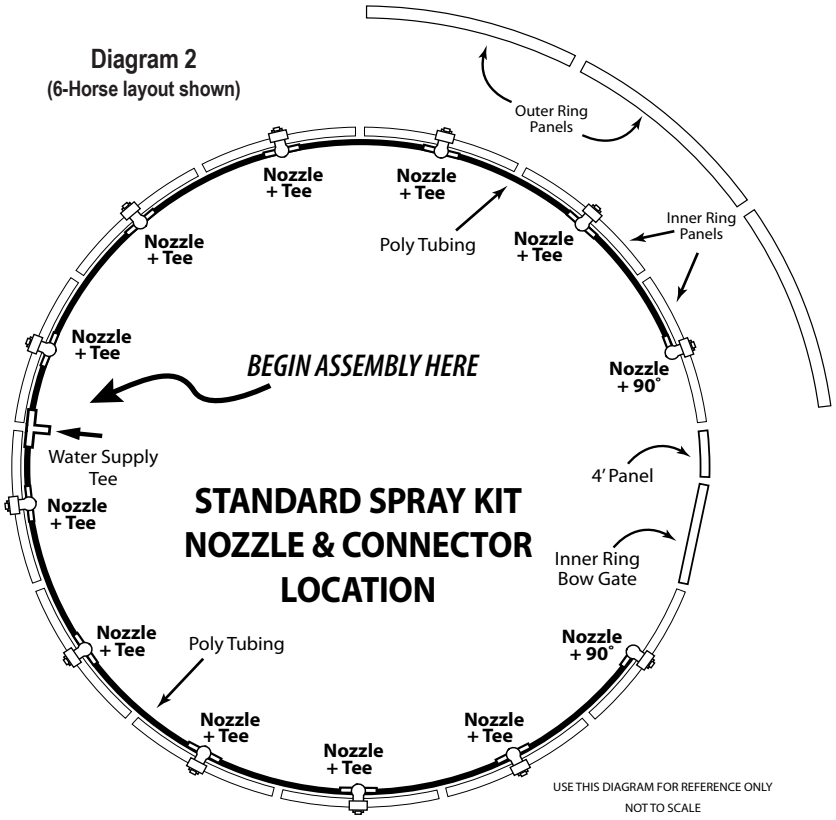

2. Assemble The Tubing

Begin by determining where the closest panel connection is to the water supply. This will be the starting point to run tubing and nozzles from. Preferably, this will be opposite of the Bow Gate or generally centered between the two ends of the finished tubing assembly (See Diagram 2).

Connect the remaining Tee fitting to one end of the Tubing. This Tee will connect to the main water supply from the Anti-Siphon valve.

Attach to the rail at the top of the solid section of the panel with supplied, self-tapping, sheet metal screw and Tubing Strap (See Diagram 3). Use three to five Tubing Straps per panel to hold Tubing securely. Some adjustment may be necessary after completing assembly. Add Tubing Straps as needed.

Note: Temporary fitment can be done with plastic zip-ties.

Optional Spray Kit Installation (cont.)

Run Poly Tube around to the stay at center of panel and cut. Insert one of the Tee/Nozzle assemblies into that end and attach Poly Tube to the other side of Tee/Nozzle assembly. Attach to panel with screw and bracket (See diagram 3 inset).

Again, run hose around to next panel center stay and cut. Insert another Tee/Nozzle assembly into the hose, attach hose to other side of Tee/Nozzle assembly.

Zip-ties may be used to hold the tubing to the panel during assembly.

Continue this process around to the last panel center stay before the Bow Gate. For the last panel, insert the PVC 90˚/Nozzle assembly into the Poly Tube instead of a Tee. Attach to the panel as before.

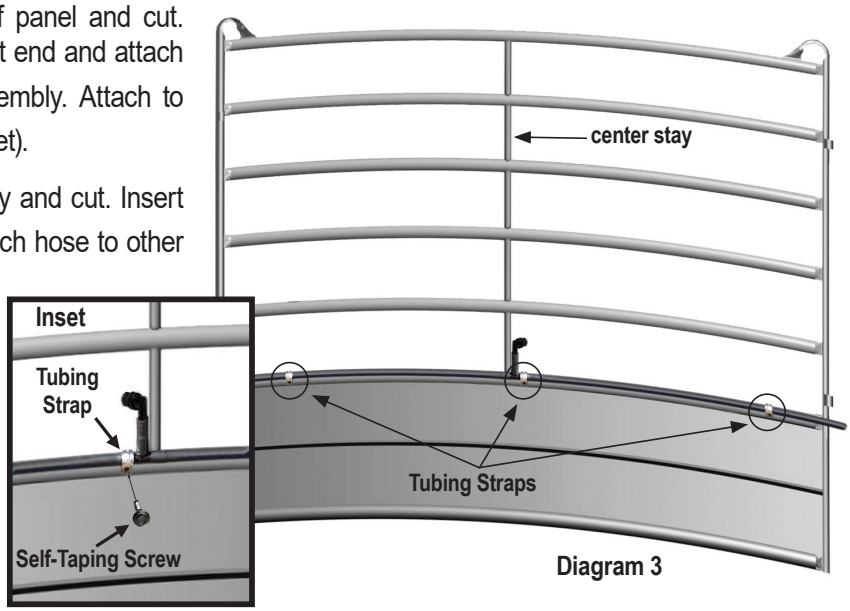

Diagram 3

Repeat this process to run the Poly Tube around the opposite direction from the Water Supply Tee at the starting point.

3. Attaching Water Supply

Before connecting the Anti-siphon valve and Timer, a flow test should be done to check for leaks or obstructions. A ½" nipple connector is provided to attach a common garden hose to the tubing to check for any problems prior to final waterline connections.

After verifying all connections, determine the location for the anti-siphon valve and timer. Convenient locations near the Walker Control Box is recommended, but not required. The anti-siphon valve is controlled by the timer and must be in-line with the main water supply to the Spray Kit assembly. (See diagram 4)

Read assembly instructions included in the Anti-Siphon Valve package, and the instructions in the Timer package to determine the best assembly options to meet your specific needs. If you have and uncertainties as to wiring or plumbing connections, please have a qualified professional perform the installation.

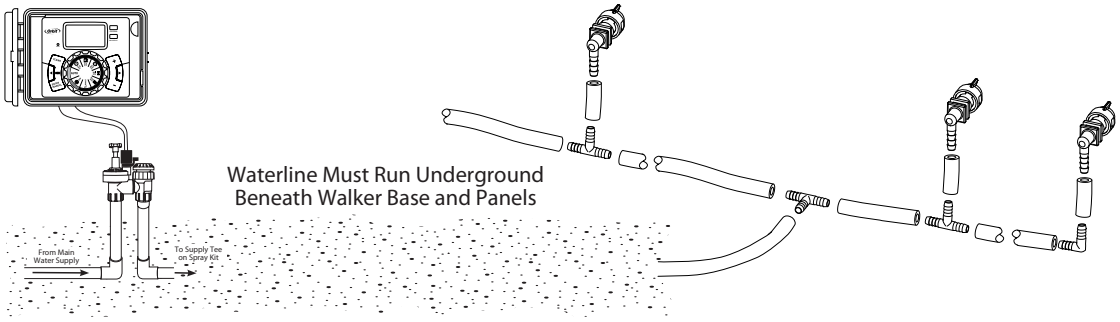

Parts List

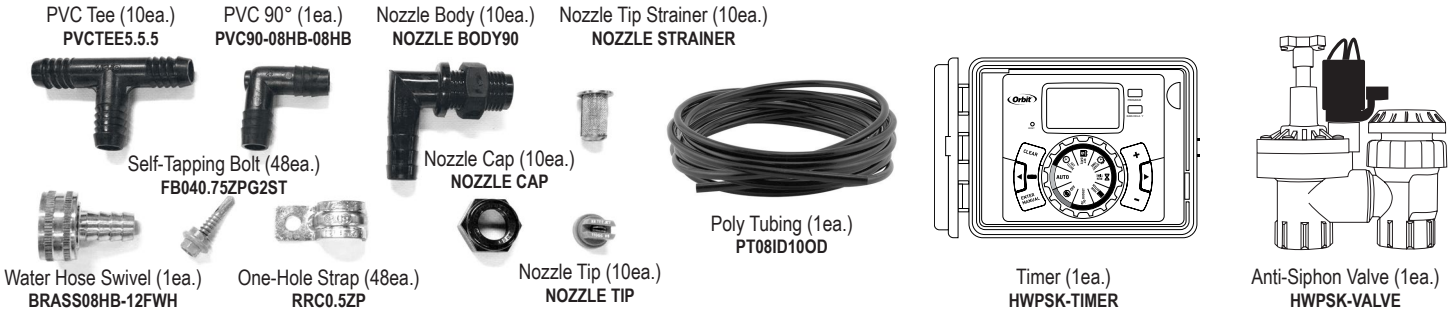

Optional Horse Walker Drag Installation

The Optional Horse walker Drag will help maintain a stable and uniform base-surface inside the Horse Walker Ring. This can help prevent injury from uneven, low and/or slippery areas due to accumulation of rain water and runoff, and will smooth, distribute and level berming along the panels. Regular use of the drag will ensure the best conditions for equine safety, well-being and peak performance.

⚠ *CAUTION:*

- ***Do not enter the walker while Drag is in operation.***
- ***Be sure gates are closed while using the Drag.***
- ***Do not stand on the Drag during operation.***
- ***Do not allow anyone to ride on the Drag.***
- ***Do not use the Drag with horses in the walker.***
- ***Unclip and remove the Drag and Chains from the walker ring immediately after use.***
- ***Remove the accumulations of grass, rocks or other debris after dragging to prevent tripping hazards.***

The Horse Walker Drag is designed to operate in either direction within the walker ring. Proper installation will allow for relatively quick base-surface touch-ups with regular use. The *directional-X* design of the drag provides the ability to distribute material where it is most needed.

1. Determine Location

After completing the assembly of the walker and round pen, choose a hanging panel that will be used for the drag. This will be the panel the drag will always attach to. Components will remain on the panel for easy attachment of the drag.

HW Drag Chain Plate & Backing Plate Assembly

Locate the HW Drag Chain Plate, Flat Backing plate, three (3) bolts and nuts.

These will attach to the bottom of the selected panel, 3 squares in from the outer edge. Attach with bolts and nuts (See Fig.1).

Insert one (1) Spring Clip through the last link of a length of Chain and clip to the plate. Move the remainder of the chain to the edge of the panel. Repeat for other plate.

Fig.1

2. Attach Drag

Place the Drag in the center of the Horse Walker ring. Study the picture below and notice the *directional-X* design of the Drag. The long "X" end of the Drag pulls the base material in from the edge. The short "X" end spreads and levels the base material. If the base material has built-up along the outer panels, locate the Drag with the long "X" end facing out (See Fig.2). If the base material has deposited along the inner panels, turn the Drag around so the long "X" faces in. This feature allows pulling the base material back into the center with even distribution.

When attaching the Chain to the Drag, allow just enough length in the Chain for the leading edge of the Drag to align with the panel. Insert a Spring Clip through a link and clip to the inner-side, center eyelet. Then, on the outer Chain, add an additional 6-8 links of slack so the Drag will pull at a slight angle. This slight angle will help stabilize the Drag, and allow dragging in either direction. Then insert a Spring Clip through a link and clip to the outer-side, center eyelet. Again, study the diagram for clarity.

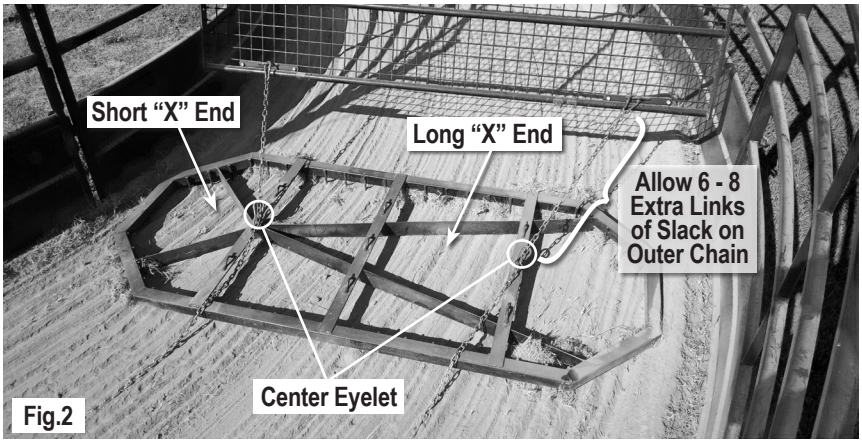

Fig.2

Parts List

HWDC-P (2ea.)
HW Drag Chain Plate

FM06SC (4ea.)
⅜" Spring Clip

FS031.25011.5-P (2ea.)
Flat Backing Plate

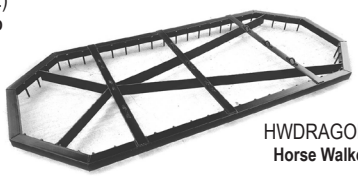

HWDRAGOB (1ea.)
Horse Walker Drag

FB061.00ZPG5 (6ea.)
⅜" x 1" Bolt

FN06ASLN (6ea.)
⅜" Fastener Nut

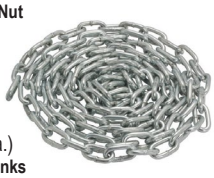

C100.96 (2ea.)
3⁄16" Chain 96 Links

References

1. https://apps.fcc.gov/kdb/GetAttachment.html?id=tz8CzcfpIVA2%2BognLZYTgA%3D%3D&desc=784748%20D01%20general%20labeling%20and%20notification%20v09r01&tracking_number=27980
Federal Communications Commission, Office of Engineering and Technology Laboratory Division, General Guidelines For Labeling And Other Information Required To Be Provided To Users, Washington, DC; July 2018.

Suggested References

- https://www.equisearch.com/guides *EQUISEARCH* - Free Guides relating to Horses, Horse Health and Horse Care
- http://www.horsefeedblog.com/tag/equine-safety/ *The Feed Room* - Resources and Insights for Happy, Healthy Horses
- https://www.thespruce.com/working-safely-with-horses-1885951 *The Spruce* - Working Safely With Horses
- http://safe-wise.com/wp-content/uploads/2015/04/EquineSafetyManual.pdf *Gillingham & Associates* - Equine Safety Manual, Insurance Risk Management
- http://www.americanequestrian.com/equinelaws/ American Equestrian Alliance - State Equestrian Liability Limitation Laws

Appendix

Equine Activity Liability Act (EALA)

The following is a list of the 47 states which have adopted the Equine Activity Liability Act (EALA):

Alabama (Code of AL 1975 §6-5-337), Alaska (Alaska Statute § 09.65.145), Arizona (AZ Rev. Stat. §12-553), Arkansas (AR Code Ch. 120, §16-120-201), Colorado (CO Rev. Stats. §13-21-119), Connecticut (CT Gen. Stat. Anno. § 52-557p), Delaware (1995 DE Code Title 10, Ch. 81, §8140), Florida (1993 FL Laws Ch. 93-169, §773.01), Georgia (Code of GA Anno. §62-2701), Hawaii (1994 HI A.L.S. 249), Idaho (ID Code 1990 Ch. 18, §6-1801), Illinois (745 ILC.S.A. §47/1), Indiana (IN Stat. Anno. §34-31-5-1), Iowa (IA Code Anno. §673.1), Kansas (1994 KS A.L.S. 290), Kentucky (KY Rev. Stat. §247.401), Louisiana (LA Rev. Stat. §9:2795.1), Maine (ME Stat. Title 7 §4101), Massachusetts (MA Gen. Laws 128 §2D), Michigan (MI C.L. §691.1661), Missouri (MO R.S. §537.325), Minnesota (MN Ch. 623, Art 3§2), Mississippi (MS Code Anno. §95-11-1), Montana (MT Code Anno. §27-1-725), Nebraska (Rev. Stat. of NE §25-21, 249), Nevada (NRS 41.480), New Hampshire (NH Rev. Stat. Anno. §508:19), New Jersey (NJ Stat. 5:15-1), New Mexico (NM Stat. Anno. Art. 13, §42-13-1), North Carolina (Gen. Stats. Of NC, ch. 99E, art. 1), North Dakota (ND Code §53-10-1), Ohio (OH Rev. Code §2305.32.1), Oklahoma (OK Stat. Title 76 §50.1), Oregon (OR Rev. Stat. §30.687), Pennsylvania (P.L. 472, No. 93, § 601-606), Rhode Island (RI Laws Ch. 21, §4-21-1), South Carolina (SC Laws §47-9-710), South Dakota (SD Laws Anno. §42-11-1), Tennessee (TN Code Anno. §44-20-101), Texas (TX Code Anno. §87.001), Utah (UT Code Anno. §78-27b-101), Virginia (VA Code Ch. 27.5, §3.1-796.130), Vermont (12 VT Stat. Anno. § 1039), Washington (WA R.C.W 4.24.530), West Virginia (WV Code Art. 4 §20-4-1), Wisconsin (WI S.A. §895.481), Wyoming (WY Stat. §1-1-122).

Note that this list is accurate only at the time of publication, and may have revisions beyond that time period. Please make it your responsibility to research laws pertaining to your state or province.

Limited Warranties:

Priefert Manufacturing Company, Inc., ("Priefert") 2630 South Jefferson, P.O. Box 1540, Mount Pleasant, TX 75456-1540, warrants for one (1) year from the purchase date to the original non-commercial, governmental, or municipal purchaser ("Purchaser") and warrants for six (6) months to the original commercial or industrial purchaser ("Purchaser") that the product purchased are free from defects in material or workmanship. Priefert will replace or repair, free of charge to the original purchaser any part(s) found, upon examination at our factory, to be defective under normal use and service due to defects in material or workmanship, provided that the original purchaser:

a. Notifies Priefert in writing of any defect in material or workmanship within the above specified warranty period.
b. Returns must be routed through an authorized Priefert dealer or distributor from whom the purchase was made.
c. Purchaser is responsible for cost of shipping.

In no event will Priefert be held liable under this warranty unless written notice is received and failure must have occurred within the warranty period. Genuine Priefert replacement parts and components will be warranted for 90 days from date of purchase, or the remainder of the original equipment warranty period, whichever is longer.

This limited warranty does not apply to any part of the product which has been subjected to improper or misintended use, negligence, alteration, modification, or accident, damaged due to lack of maintenance or use of wrong oil or lubricants, or repairs that have been made with parts other than those obtainable through Priefert, or which has served its usual life. This limited warranty does not apply to any expendable item such as blades, shields, guards, or pneumatic tires, or other trade accessories since these items are warranted separately by their respective manufacturers, except as specifically noted in your Operator's Manual.

Except as provided herein, no employee, agent, Dealer, or other person is authorized to give any warranties of any nature on behalf of Priefert. Only Priefert is authorized to make any representation to the purchaser concerning "normal" use and service for its product as described in the Operator's Manual, or in authorized printed materials or stickers affixed to the product.

If after examination of the product and/or part(s) in question; Priefert finds them to be defective under normal use and service due to defects in material or workmanship,

Priefert will:

1. Repair or replace the defective product or part(s); if Priefert has made several reasonable number of attempts in repairing the product and/or part(s) to conform to the warranty; then
2. Priefert will replace part(s) or product.
3. Purchaser is responsible for any labor charges exceeding a reasonable amount as determined by Priefert and for returning product and/or part(s) to the Dealer, whether or not the claim is approved. Purchaser is responsible for the transportation cost for the product or part(s) from the Dealer to the factory.

The choice of remedy shall belong to Priefert. Repair or replacement are the only remedies against Priefert under this limited warranty.

Limitation of Liability:

1. Priefert disclaims any express (except as set forth herein) and implied warranties with respect to the product including, but not limited to, merchantability and fitness for a particular purpose.
2. Priefert makes no warranty as to the design, capability, capacity, or suitability for use of the product.
3. This warranty shall not be interpreted to render us liable for injury or damages of any kind or nature to person or property. Priefert will not be liable for any special, incidental or consequential damages based upon breach of warranty, breach of contract, negligence, strict tort liability, or any other legal theory. Such damages include but are not limited to loss of crops, loss of savings or revenue, cost of capital, loss of use of equipment, facilities or services, down time, expense or loss incurred for labor, supplies, substitute machinery, rental, and claims of third parties including customers, and injury to property.

Supplementary:

1. Proper venue for any lawsuits arising from or related to this limited warranty shall be only in Titus County, Texas.
2. Priefert may waive compliance with any of the terms of this limited warranty, but no waiver of any terms shall be deemed to be a waiver of any other term.
3. If any provision of this limited warranty violates any applicable law and is held unenforceable, then the invalidity of such provision shall not invalidate any other provisions.
4. Applicable law may provide rights and benefits to purchaser in addition to those herein.

2630 South Jefferson P.O. Box 1540 Mount Pleasant, Texas 75456-1540